# GENERAL NOTES

GENERAL:

1. CONTRACTOR, SUBCONTRACTORS AND SUPPLIERS SHALL REVIEW AND VERIFY ALL NOTES, DIMENSIONS AND INFORMATION ON THESE DRAWINGS PRIOR TO CONSTRUCTION AND REPORT ANY DISCREPANCIES, OMISSIONS OR CHANGES TO THE ARCHITECT. IF ERRORS, OMISSIONS, OR QUESTIONS REGARDING THE DRAWINGS BECOME EVIDENT OR ARE SUSPECTED, THE ITEM SHALL BE BROUGHT TO THE ATTENTION OF THE ARCHITECT IN WRITING PRIOR TO PROCEEDING WITH WORK. FAILURE TO DO SO SHALL RELIEVE THE ARCHITECT OF ANY LIABILITIES FOR ERRORS OR OMISSIONS IN THE PLANS.
2. THE CONTRACTOR SHALL VERIFY SITE CONDITIONS AND DIMENSIONS PRIOR TO STARTING ANY WORK. ANY DISCREPANCIES FROM THESE DRAWINGS SHALL BE BROUGHT TO THE ATTENTION OF THE ARCHITECT IN WRITING PRIOR TO PROCEEDING WITH WORK.
3. ALL WORK IS TO BE PERFORMED IN A THOROUGH AND GOOD WORKMANSHIP-LIKE MANNER BY SKILLED WORKERS IN CONFORMANCE WITH THE BEST STANDARDS OR PRACTICES IN THE TRADE.
4. ALL WORK SHALL COMPLY WITH APPLICABLE LOCAL, COUNTY, STATE AND FEDERAL CODES, ORDINANCES, RULES AND REGULATIONS.
5. THE CONSTRUCTION SITE SHALL BE MAINTAINED IN A CLEAN, ORDERLY AND SAFE MANNER. DEBRIS SHALL BE PLACED IN TRASH RECEPTACLES OR BINS. FENCE OFF OPEN TRENCHES OR OTHER HAZARDS FROM TRESPASSERS. STORE VALUABLE MATERIALS, TOOLS, SUPPLIES OR APPLIANCES IN A LOCKED SPACE. CONFORM WITH BUILDING MANAGEMENT REGULATIONS FOR NOISE CONTROL, CLEAN-UP AND SITE CONDITIONS.
6. ALL FEDERAL AND STATE SAFETY AND OSHA REGULATIONS SHALL BE ENFORCED FOR ALL WORK, EQUIPMENT AND CONSTRUCTION METHODS.
7. IF ASBESTOS OR ASBESTOS-CONTAINING MATERIALS ARE ENCOUNTERED DURING DEMOLITION OR CONSTRUCTION, STOP WORK AND DO NOT DISTURB THOSE MATERIALS. NOTIFY OWNER AND ARCHITECT WHO WILL CONSULT WITH A LICENSED ASBESTOS ABATEMENT PROFESSIONAL TO PROPERLY REMOVE THE MATERIALS PRIOR TO PROCEEDING. LIMITED ASBESTOS TESTING PERFORMED BY OWNER
8. PROVIDE TEMPORARY SHORING FOR THE EXISTING STRUCTURE DURING DEMOLITION UNTIL THE NEW SUPPORTING STRUCTURE IS IN PLACE.
9. LOCATE AND STAKE ALL EXISTING UNDERGROUND UTILITY LINES PRIOR TO EXCAVATION, TRENCHING OR DIGGING. REPLACE OR REPAIR ANY DAMAGE TO EXISTING LINES THAT MAY OCCUR.
10. FOR ADDITIONS AND REMODELS: HIDDEN CONDITIONS MAY EXIST AT THE TIME OF PREPARATION OF THE DRAWINGS. IF EXPOSURE OF THESE HIDDEN CONDITIONS RESULT IN CONFLICTS WITH THE DRAWINGS, THE ARCHITECT SHALL BE NOTIFIED IMMEDIATELY IN WRITING PRIOR TO PROCEEDING WITH ANY WORK.
11. ALL DIMENSIONS ARE FROM FACE OF NEW FRAMING, FACE OF EXISTING MASONRY, OR FACE OF FINISH ON EXISTING WALLS UNLESS NOTED OTHERWISE ON THE DRAWINGS.
12. ALL GLASS WITHIN 18" OF FLOOR AND WITHIN A 24" ARC OF DOOR JAMBS TO BE TEMPERED GLASS. ALL GLASS WITHIN DOORS ALSO SHALL BE TEMPERED.
13. ALL SMOKE DETECTORS SHALL BE PERMANENTLY WIRED AND INTERCONNECTED WITH BATTERY BACKUP.
14. ALL EXITS SHALL BE OPERABLE FROM THE INSIDE WITHOUT THE USE OF A KEY OR SPECIAL KNOWLEDGE. MANUALLY OPERATED EDGE OR SURFACE-MOUNTED FLUSH BOLTS OR SURFACE BOLTS ARE PROHIBITED.
15. APPLICABLE CODES: ALL WORK & MATERIALS SHALL BE IN ACCORDANCE WITH THE CURRENT EDITIONS OF THE GOVERNING CODES AND APPLICABLE STANDARDS.
16. NOTE TO THE GENERAL CONTRACTOR/BUILDER/TRADES: CONTRACTOR IS RESPONSIBLE FOR: DIMENSIONS WHICH SHALL BE CONFIRMED AND CORRELATED AT THE JOB SITE; FABRICATION PROCESSES AND TECHNIQUES OF CONSTRUCTION; COORDINATION OF HIS WORK WITH THAT OF ALL OTHER TRADES; FURNISHING ALL ITEMS REQUIRED FOR THE PROPER EXECUTION, COMPLETION AND SATISFACTORY PERFORMANCE OF ALL WORK NECESSARY, INDICATED, REASONABLY INFERRED OR REQUIRED BY ANY CODE WITH JURISDICTION TO COMPLETE THEIR SCOPE OF WORK FOR A COMPLETE & PROPER FINISHED JOB. IN CASE OF ANY QUESTIONS OR NEED FOR FURTHER CLARIFICATION OF INFORMATION AND/OR DETAILS, CONTRACTOR SHOULD CONTACT THE ARCHITECT PRIOR TO FURTHER CONSTRUCTION OR FABRICATION OF ITEMS IN QUESTION. CONTRACTOR SHALL TAKE DIRECTION FROM DESIGNATED OWNER'S REPRESENTATIVE.
17. MATERIAL SELECTION: MANUFACTURER, MAKE, MODEL NUMBER, COLOR, ETC., OF FINISH MATERIALS, APPLIANCES, ETC., SHALL BE SELECTED BY THE OWNER REPRESENTATIVE AND/OR ARCHITECT.
18. SUBSTITUTIONS: NO SUBSTITUTIONS SHALL BE MADE WITHOUT THE OWNER REP./ARCHITECT'S PRIOR WRITTEN APPROVAL.
19. GUARANTEE: THE ARCHITECT MAKES NO EXPRESSED OR IMPLIED GUARANTEE FOR PRODUCTS IDENTIFIED BY TRADE NAME OR MANUFACTURER.
20. JOB CLEAN UP: ALL TRADES SHALL KEEP THE PREMISES FREE FROM ACCUMULATION OF WASTE AND/OR RUBBISH CAUSED BY THEIR WORK. ALL RUBBISH, TOOLS, AND SURPLUS SUPPLIES AND MATERIALS SHALL BE REMOVED AT THE COMPLETION OF THE DAY'S WORK. LEAVE THE JOB IN A BROOM CLEAN CONDITION. PROVIDE DUST CONTROL DAILY.
21. DIMENSIONS: DO NOT SCALE DRAWINGS. WRITTEN DIMENSIONS TAKE PRECEDENCE OVER SCALED DIMENSIONS. ALL DIMENSIONS ARE TO FACE OF STUD OR TO FACE OF FRAMING UNLESS OTHERWISE NOTED. VERIFY ALL FRAMING DIMENSIONS AT CABINETS, ETC., TO INSURE PROPER FIT. ALL DIMENSIONS SHALL BE CONFIRMED AND CORRELATED BY THE CONTRACTOR AT THE JOB SITE. IN CASE OF ANY QUESTIONS, THE CONTRACTOR SHOULD NOTIFY THE ARCHITECT FOR FURTHER CLARIFICATION.
22. SHOP DRAWINGS & CONSULTANT'S DRAWINGS: REFER TO SHOP DRAWINGS AND CONSULTANT'S DRAWINGS FOR FURTHER PROJECT SCOPE AND COORDINATION REQUIREMENTS.
23. NEW WORK TO BLEND INTO EXISTING. FINISH TO NEAREST CORNER OR BREAK IN MATERIAL TYPE. PROVIDE J-STRIP AT EDGES OF GYP. BD. AGAINST DISSIMILAR MATERIALS. CAULK FOR NEAT APPEARANCE AND TO PREVENT WATER PENETRATION.

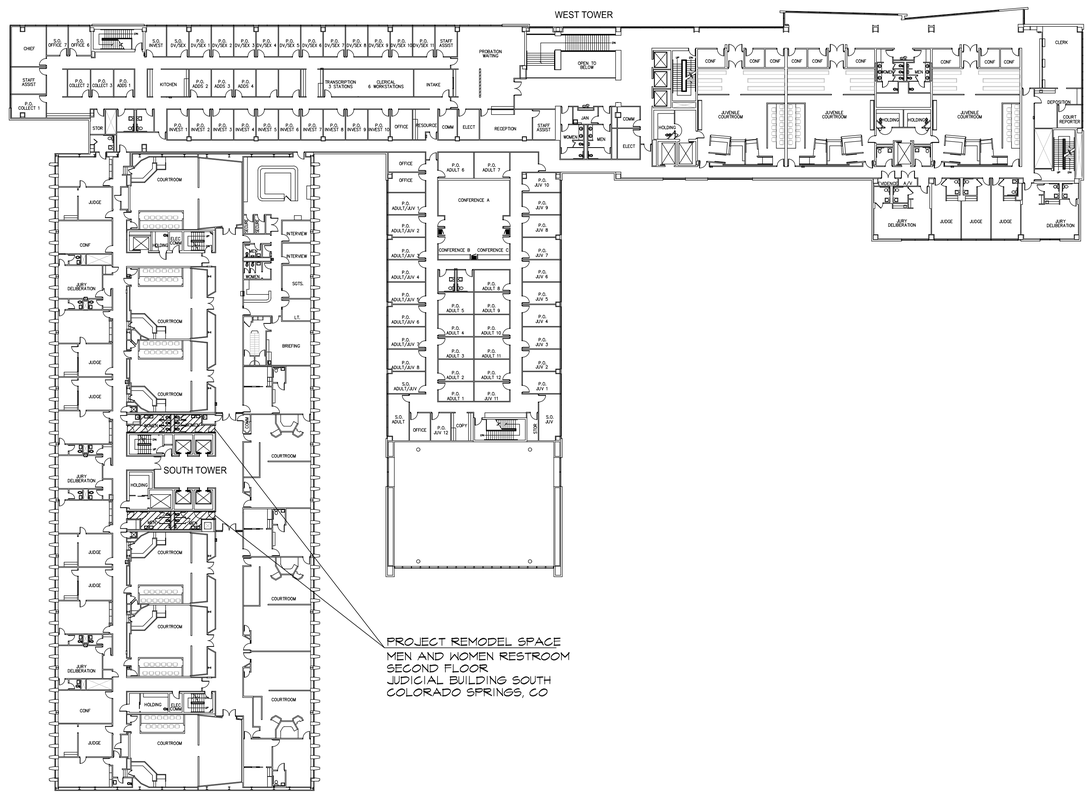


## SECOND FLOOR KEY PLAN

SCALE: NTS

NORTH

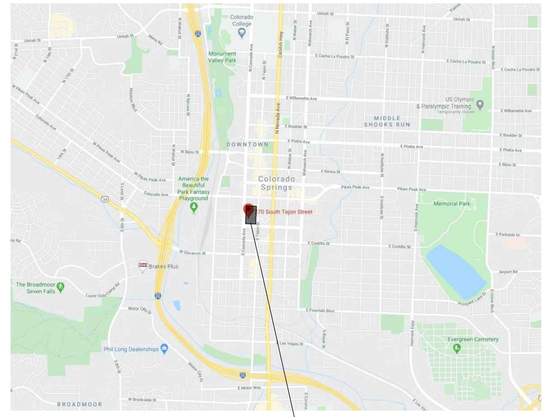


## VICINITY MAP

NOT TO SCALE

NORTH

PROJECT BUILDING
270 SOUTH TEJON STREET
COLORADO SPRINGS, CO

# PROJECT DATA

OWNER:
EL PASO COUNTY
325 S. CASCADE AVENUE
COLORADO SPRINGS, CO 80903

PROJECT ADDRESS:
EL PASO COUNTY JUDICIAL BUILDING
270 SOUTH TEJON STREET
COLORADO SPRINGS, CO 80903

PROJECT DESCRIPTION:
THE PROJECT IS A REMODEL OF THE EXISTING MEN AND WOMEN RESTROOMS ON THE SECOND FLOOR TO UPGRADE THEM TO CURRENT ACCESSIBILITY STANDARDS. IN ORDER TO CREATE THE CORRECT CLEARANCES, THERE WILL BE A REDUCTION IN TOILET FIXTURES.

ASSESSOR'S SCHEDULE NO.
6418308023

LEGAL DESCRIPTION:
TR BEING A POR OF LOT 1 EL PASO COUNTY JUDICIAL PLAZA DESC AS FOLS: BEG AT THE SW COR OF SD LOT 1, TH N 00°00'38" W ALG THE WLY LN OF SD LOT 1 AND ALG THE ELY LN OF CASCADE AVE 485.88 FT, S 89°53'45" E 73.03 FT, S 00°06'15" W 6.50 FT, S 89°53'45" E 36.25 FT, S 00.06'15" W 93.50 FT, N 89°53'45" W 36.25 FT, S 00°06'15" W 138.50 FT, S 89°53'45" E 174.25 FT, S 00°06'15" W 14.25 FT, S 89°53'45" E 153.79 FT TO A PT ON THE ELY LN OF SD LOT 1 AND THE WLY LN OF TEJON ST, S 00°03'00" E ALG SD ELY LN OF SD LOT 1 AND SD WLY LN OF TEJON ST 63.50 FT, N 89°53'45" W 189.59 FT, S 00°06'15" W 42.04 FT, N 89°53'45" W 143.88 FT, S 00°06'15" W 127.44 FT TO A PT ON THE SLY LN OF LOT 1 AND THE NLY LN OF VERMIJO AVE, S 89°58'50" W ALG SD SLY LN OF LOT 1 AND SD NLY LN OF VERMIJO AVE, S 89°58'50" W ALG SD SLY LN OF LOT 1 AND SD NLY LN OF VERMIJO AVE 66.77 TO POB

CITY ZONING CLASSIFICATION:
FBZ-GEN

EXISTING CONSTRUCTION TYPE:
I-B, FULLY SPRINKLERED

EXISTING BUILDING OCCUPANCY:
A-3, CONFERENCE, COURTROOM
B, OFFICE

EXISTING BUILDING AREA:

| | BUILDING USE | AREA | | OCC LOAD | OCCUPANTS | |
|---|---|---|---|---|---|---|
| SECOND FLOOR | A-3, CONFERENCE | 4,099.11 | SF | 1/15 | 273.27 | OCC |
| | A-3, COURTROOM | 8,177.32 | SF | 1/40 | 315.43 | OCC (111+204.43) |
| | B, OFFICE | 18,343.48 | SF | 1/100 | 183.43 | OCC |
| | TOTAL | 20617.07 | SF | | 276.99 | OCC |

PLUMBING FIXTURE CALCULATIONS:

FIXTURES REQUIRED:
1/50 WC = 14 WC REQUIRED, 7 EA. SEX
1/40 LAV = 18 LAV REQUIRED, 9 EA. SEX

EXISTING FIXTURES PROVIDED:
MEN = 5 WC, 3 URINAL, 5 LAV
WOMEN = 8 WC, 5 LAV
UNISEX = 4 WC, 4 LAV

NEW FIXTURES PROVIDED:
MEN = 5 WC, 1 URINALS, 3 LAV
WOMEN = 6 WC, 3 LAV
UNISEX = 15 WC, 15 LAV

# GOVERNING CODES

ALL CONSTRUCTION SHALL COMPLY WITH THE FOLLOWING CODES AND AMENDMENTS PER THEIR ADOPTING ORDINANCES.

2011 Pikes Peak Regional Building Code
2009 International Building Code with amendments
2009 International Existing Building Code with amendments
2009 International Energy Conservation Code with amendments
2009 International Mechanical Code with amendments
2009 International Fuel Gas Code
2015 International Plumbing Code
2014 National Electrical Code/NFPA-70 with amendments
2009 International Fire Code
NFPA 13 Installation of Sprinkler Systems
NFPA 14 Installation of Standpipe, Private
NFPA 72 National Fire Alarm Code
NFPA 20 Installation of Fire Pumps
2003 ICC/ANSI A117.1 Accessibility Standard
2004 ASME A17.1 Safety Code for Elevators and Escalators
2002 ASME A17.3 Safety Code for Existing Elevators and Escalators
2009 Floodplain Regulation Amendments

# PROJECT TEAM

OWNER:
EL PASO COUNTY
FACILITIES SERVICES
325 S. CASCADE AVENUE
COLORADO SPRINGS, CO 80903
PHONE: 719.520.6811
JOE TOLEDO

TENANT:
EL PASO COUNTY
JUDICIAL BUILDING
270 SOUTH TEJON STREET
COLORADO SPRINGS, CO 80903
PHONE: 719-520-6573

ARCHITECT:
TDG ARCHITECTURE
201 E. LAS ANIMAS STREET, STE. 113
COLORADO SPRINGS, CO 80903
PHONE: 719.623.5641
SHARON ALLEN
BENJAMIN KAPLOWITZ

MEP ENGINEERS:
51 ENGINEERING CONSULTANTS, INC.
31 NORTH TEJON STREET, STE 303-305
COLORADO SPRINGS, CO 80903
PHONE: 719.368.7341
AARON SPRINGFIELD

# SHEET INDEX


| | |
|---|---|
| CS | COVER SHEET, PROJECT DATA, CODE DATA |
| G0.1 | OCCUPANCY LOAD + PLUMBING FIXTURE CALCULATIONS |
| G0.2 | ARCHITECTURAL SPECIFICATIONS |
| A1.0 | DEMOLITION FLOOR PLAN, CONSTRUCTION FLOOR PLAN |
| A1.1 | INTERIOR ELEVATIONS |
| P-001 | PLUMBING LEGEND, NOTES AND SPECIFICATIONS |
| PD-W-105 | LEVEL 2 WATER PIPING DEMOLITION PLAN |
| PD-S-105 | LEVEL 2 WASTE AND VENT DEMOLITION PLAN |
| P-W-105 | LEVEL 2 WATER PIPING NEW WORK |
| P-S-105 | LEVEL 2 WASTE AND VENT PIPING NEW WORK PLAN |
| P-601 | SCHEDULES AND CALCULATIONS |
| E-001 | ELECTRICAL LEGEND, NOTES AND SPECIFICATIONS |
| ED-L-105 | LEVEL 2 LIGHTING DEMOLITION PLAN |
| ED-P-105 | LEVEL 2 POWER DEMOLITION PLAN |
| E-L-105 | LEVEL 2 LIGHTING NEW WORK PLAN |
| E-P-1-5 | LEVEL 2 POWER NEW WORK PLAN |
| E-602 | PANELS SCHEDULES AND CALCULATIONS |


9/11/2020

REVISIONS

| | DATE | FOR |
|---|---|---|
| | | |
| | | |
| | | |
| | | |

STATE OF COLORADO
MARK W. TREMMEL
B-1938
LICENSED ARCHITECT


TDG Architecture
201 East Las Animas Street, Suite 113
Colorado Springs, CO 80903
719.623.5641 (Phone)
719.623.5643 (Fax)


EL PASO COUNTY

EL PASO COUNTY
JUDICIAL BUILDING SOUTH
SECOND FLOOR
RESTROOM REMODEL
270 SOUTH TEJON STREET
COLORADO SPRINGS, CO 80903

VICINITY MAP
PROJECT DATA
SHEET INDEX

DATE: 09/10/2020
DRAWN BY: TDG
CHECKED BY: TDG
PROJECT NO: 20110

SHEET NO:
CS

TDG Architecture

March 15, 2020

**Judicial Building South Tower**
270 S Cascade
Colorado Springs, CO

| Room Name | Room No. | | Area SF | A-3 Occ. | E Occ. | B Occ. | Total Per Floor | total sf |
|---|---|---|---|---|---|---|---|---|
| **02 Basement** | | | | | | | | 2,097.78 |
| Office | | 1/ 100 | | | | | | 1,976.00 |
| Holding | | | 943.28 | | | 9.43 | | 121.78 |
| Stairs/Elevator | | 1/ 0 | 1,032.72 | | | | | |
| Exterior Walls | | 1/ 0 | 121.78 | | | | | 2,097.78 |
| | | | | 0.00 | 0.00 | 9.43 | 9.43 | |
| **01 Basement** | | | | | | | | 25,950.88 |
| Office | | 1/ 100 | | | | | | 24,953.58 |
| Office, Break | S010, S009 | | 261.44 | | | 2.61 | | 997.30 |
| Security | | | 158.92 | | | 1.59 | | |
| Remaining | | | 5,842.38 | | | 58.42 | | 25,950.88 |
| Conference | | 1/ 15 | | | | | | |
| Conf A | S022 | | 357.06 | 23.80 | | | | |
| Conf B | S024 | | 93.03 | 6.20 | | | | |
| Conf C | S025 | | 148.13 | 9.88 | | | | |
| Conf D | S026 | | 109.45 | 7.30 | | | | |
| Conf E | S029 | | 105.70 | 7.05 | | | | |
| Conf F | S028 | | 100.51 | 6.70 | | | | |
| Storage | | 1/ 100 | | | | | | |
| Storage and Records | | | 7,115.65 | | | 71.16 | | |
| Food Storage | S012 | | 226.88 | | | 2.27 | | |
| Tool Storage | | | 132.15 | | | 1.32 | | |
| Jud Storage | S031 | | 622.50 | | | 6.23 | | |
| Jud Storage | S018 + | | 1,265.09 | | | 12.65 | | |
| Mechanical | | 1/ 300 | | | | | | |
| Mech | | | 277.22 | | | 0.92 | | |
| Mech | | | 1,990.37 | | | 6.63 | | |
| Mech | | | 4,389.61 | | | 14.63 | | |
| Mech | | | 467.52 | | | 1.56 | | |
| Mech | | | 43.88 | | | 0.15 | | |
| Stairs/Elevator | | 1/ 0 | 1,246.09 | | | | | |
| Exterior Walls | | 1/ 0 | 997.30 | | | | | |
| | | | | 60.93 | 0.00 | 180.15 | 241.07 | |
| **1 First Floor** | | | | | | | | 25,846.43 |
| Office | | 1/ 100 | | | | | | 25,103.28 |
| Remaining | | | 21,583.60 | | | 215.84 | | 743.15 |
| Day Care | | 1/ 35 | | | | | | |
| Day Care | S144 | | 686.17 | | 19.60 | | | 25,846.43 |
| Day Care | S145 | | 520.71 | | 14.88 | | | |
| Court Room | | 1/ 40 | | | | | | |
| Courtroom | S102 | | 1066.71 | 26.67 | | | | |
| Stairs/Elevator | | 1/ 0 | 1,246.09 | | | | | |
| Exterior Walls | | 1/ 0 | 743.15 | | | | | |
| | | | | 87.59 | 34.48 | 513.50 | 635.57 | |
| **2 Second Floor** | | | | | | | | 33,060.00 |
| Office | | 1/ 100 | | | | | | 31,866.00 |
| Remaining | | | 18,343.48 | | | 183.43 | | 1,194.00 |
| Conference | | 1/ 15 | | | | | | |
| Conference | S236 | | 348.78 | 23.25 | | | | 33,060.00 |
| Conference | S226 | | 348.78 | 23.25 | | | | |
| | S237A | | 296.41 | 19.76 | | | | |
| Deliberation | S234 | | 284.38 | 18.96 | | | | |
| | S233A | | 329.34 | 21.96 | | | | |
| | 232A | | 329.34 | 21.96 | | | | |
| Deliberation | S231 | | 284.38 | 18.96 | | | | |
| | S230A | | 329.34 | 21.96 | | | | |
| | S229A | | 331.77 | 22.12 | | | | |
| Deliberation | S228 | | 284.38 | 18.96 | | | | |
| | S225A | | 296.41 | 19.76 | | | | |
| | S282 | | 319.44 | 21.30 | | | | |
| | S292 | | 316.36 | 21.09 | | | | |
| Court Room | | 1/ 40 | | | | | | |
| Courtroom | S202 | | 763.61 | 19.09 | | | | |
| Jury | | | | 13.00 | | | | |
| Courtroom | S201 | | 1,249.46 | 31.24 | | | | |
| Jury | | | | 13.00 | | | | |
| Courtroom | S202 | | 762.84 | 19.07 | | | | |
| Jury | | | | 13.00 | | | | |
| Courtroom | S203 | | 762.99 | 19.07 | | | | |
| Jury | | | | 13.00 | | | | |
| Courtroom | S204 | | 762.24 | 19.06 | | | | |
| Jury | | | | 13.00 | | | | |
| Courtroom | S205 | | 762.84 | 19.07 | | | | |
| Jury | | | | 13.00 | | | | |
| Courtroom | S206 | | 1,245.99 | 31.15 | | | | |
| Jury | | | | 13.00 | | | | |
| Courtroom | S280 | | 985.66 | 24.64 | | | | |
| Jury | | | | 13.00 | | | | |
| Courtroom | S290 | | 881.69 | 22.04 | | | | |
| Jury | | | | 7.00 | | | | |
| Stairs/Elevator | | 1/ 0 | 1,246.09 | | | | | |
| Exterior Walls | | 1/ 0 | 1,194.00 | | | | | |
| | | | | 588.71 | 0.00 | 183.43 | 772.14 | |
| **3 Third Floor** | | | | | | | | 33,060.00 |
| Office | | 1/ 100 | | | | | | 31,866.00 |
| Remaining | | | 18,261.98 | | | 182.62 | | 1,194.00 |
| Conference | | 1/ 15 | | | | | | |
| | S333A | | 296.41 | 19.76 | | | | 33,060.00 |
| Jury Room | S332 | | 284.38 | 18.96 | | | | |
| | S331 | | 329.34 | 21.96 | | | | |
| | S330A | | 329.34 | 21.96 | | | | |
| | S329A | | 329.34 | 21.96 | | | | |
| Jury Room | S328 | | 278.30 | 18.55 | | | | |
| | S326A | | 329.34 | 21.96 | | | | |
| | S325A | | 329.34 | 21.96 | | | | |
| Jury Room | S324 | | 284.38 | 18.96 | | | | |
| | S323A | | 296.41 | 19.76 | | | | |
| | S351 | | 426.24 | 28.42 | | | | |
| | S375 | | 234.00 | 15.60 | | | | |
| | S385 | | 249.94 | 16.66 | | | | |
| Court Room | | 1/ 40 | | | | | | |
| Courtroom | S301 | | 1,169.92 | 29.25 | | | | |
| Jury | | | | 13.00 | | | | |
| Courtroom | S302 | | 760.03 | 19.00 | | | | |
| Jury | | | | 13.00 | | | | |
| Courtroom | S303 | | 761.87 | 19.05 | | | | |
| Jury | | | | 13.00 | | | | |
| Courtroom | S304 | | 761.13 | 19.03 | | | | |
| Jury | | | | 13.00 | | | | |
| Courtroom | S305 | | 761.74 | 19.04 | | | | |
| Jury | | | | 13.00 | | | | |
| Courtroom | S306 | | 1,244.88 | 31.12 | | | | |
| Jury | | | | 13.00 | | | | |
| Courtroom | S350 | | 500.72 | 12.52 | | | | |
| Courtroom | S360 | | 494.36 | 12.36 | | | | |
| Courtroom | S370 | | 972.86 | 24.32 | | | | |
| Jury | | | | 13.00 | | | | |
| Courtroom | S380 | | 933.66 | 23.34 | | | | |
| Jury | | | | 13.00 | | | | |
| Stairs/Elevator | | 1/ 0 | 1,246.09 | | | | | |
| Exterior Walls | | 1/ 0 | 1,194.00 | | | | | |
| | | | | 579.48 | 0.00 | 182.62 | 762.10 | |
| **4 Floor** | | | | | | | | 33,060.00 |
| Office | | 1/ 100 | | | | | | 31,866.00 |
| Remaining | | | 22,337.75 | | | 223.38 | | 1,194.00 |
| Conference | | 1/ 15 | | | | | | 33,060.00 |
| Conference | S437 | | 438.78 | 29.25 | | | | |
| Conference | S426 | | 438.78 | 29.25 | | | | |
| Conference | S411 | | 474.58 | 31.64 | | | | |
| | S438A | | 295.31 | 19.69 | | | | |
| Jury Room | S435 | | 280.73 | 18.72 | | | | |
| | S434A | | 321.80 | 21.45 | | | | |
| | S433A | | 321.13 | 21.41 | | | | |
| Jury Room | S431 | | 277.52 | 18.50 | | | | |
| | S430A | | 320.63 | 21.38 | | | | |
| | S429A | | 328.13 | 21.88 | | | | |
| | S428 | | 280.73 | 18.72 | | | | |
| | S423A | | 293.13 | 19.54 | | | | |
| Court Room | | 1/ 40 | | | | | | |
| Courtroom | S401 | | 1,166.14 | 29.15 | | | | |
| Jury | | | | 13.00 | | | | |
| Courtroom | S402 | | 760.03 | 19.00 | | | | |
| Jury | | | | 13.00 | | | | |
| Courtroom | S403 | | 761.87 | 19.05 | | | | |
| Jury | | | | 13.00 | | | | |
| Courtroom | S404 | | 761.13 | 19.03 | | | | |
| Jury | | | | 13.00 | | | | |
| Courtroom | S405 | | 761.74 | 19.04 | | | | |
| Jury | | | | 17.00 | | | | |
| Fixed Seating | | | | 76.00 | | | | |
| Stairs/Elevator | | 1/ 0 | 1,246.09 | | | | | |
| Exterior Walls | | 1/ 0 | 1,194.00 | | | | | |
| | | | | 521.69 | 0.00 | 223.38 | 745.07 | |
| **5 Floor** | | | | | | | | 25,536.00 |
| Office | | 1/ 100 | | | | | | 25,175.00 |
| Remaining | | | 16,224.94 | | | 162.25 | | 361.00 |
| Conference | | 1/ 15 | | | | | | |
| Judicial | next to S526 | | 366.71 | 24.45 | | | | 25,536.00 |
| | next to S534 | | 312.85 | 20.86 | | | | |
| | next to S533 | | 312.85 | 20.86 | | | | |
| Jury Room | S529 | | 318.06 | 21.20 | | | | |
| | next to S524 | | 309.45 | 20.63 | | | | |
| | next to S523 | | 313.18 | 20.88 | | | | |
| Judicial | next to S521 | | 364.46 | 24.30 | | | | |
| Jury Room | S519 | | 268.52 | 17.90 | | | | |
| Jury Room | S538 | | 266.42 | 17.76 | | | | |
| Court Room | | 1/ 40 | | | | | | |
| Courtroom | S501 | | 894.80 | 22.37 | | | | |
| Jury | | | | 13.00 | | | | |
| Courtroom | S502 | | 775.51 | 19.39 | | | | |
| Jury | | | | 13.00 | | | | |
| Courtroom | S503 | | 738.27 | 18.46 | | | | |
| Jury | | | | 13.00 | | | | |
| Courtroom | S504 | | 771.37 | 19.28 | | | | |
| Jury | | | | 13.00 | | | | |
| Courtroom | S505 | | 737.16 | 18.43 | | | | |
| Jury | | | | 13.00 | | | | |
| Courtroom | S506 | | 631.89 | 15.80 | | | | |
| Jury | | | | 13.00 | | | | |
| Courtroom | S514 near | | 322.47 | 8.06 | | | | |
| Stairs/Elevator | | 1/ 0 | 1,246.09 | | | | | |
| Exterior Walls | | 1/ 0 | 361.00 | | | | | |
| | | | | 388.62 | 0.00 | 162.25 | 550.87 | |
| **6 Floor** | | | | | | | | 3,575.00 |
| Mechanical | | 1/ 300 | | | | | | 3,495.44 |
| Remaining | | | 3,326.88 | | | 11.09 | | 79.56 |
| Stairs/Elevator | | 0 | 168.56 | | | | | 3,575.00 |
| Exterior Walls | | 0 | 79.56 | | | | | |
| | | | | 0.00 | 0.00 | 11.09 | 11.09 | |
| | | | | 2,227.01 | 34.48 | 1,465.85 | 3,727.35 | 3,727.35 |

# OCCUPANCY LOAD CALC.S
SCALE: NTS

TDG Architecture

March 12, 2020

**JUDICIAL BUILDING SOUTH TOWER**
270 South Tejon Street
Colorado Springs, CO

**02 Basement**
Total Occupants 9.43 — Per Sex 4.7164

**Plumbing Fixtures Required**

| | W.C. | +1 | Urinal | Lav. | +1 |
|---|---|---|---|---|---|
| **Men** | 1/50 | | | 1/40 | |
| calc'd | 0.1 | | | 0.1 | |
| rounded up | | | | | |
| **Women** | 1/50 | | | 1/40 | |
| calc'd | 0.1 | | | 0.1 | |
| rounded up | | | | | |
| Total M&W | 0 | | | 0 | |

**02 Basement**

**Plumbing Fixtures Provided**

| | W.C. | Urinal | Lav. |
|---|---|---|---|
| **Men** | | | |
| **Women** | | | |
| **Unisex** | | | |
| **Holding** (not counted) | 3 | | |
| Total M&W | 0 | 0 | 0 |

**01 Basement**
Total Occupants 241.07 — Per Sex 120.535

**Plumbing Fixtures Required**

| | W.C. | +1 | Urinal | Lav. | +1 |
|---|---|---|---|---|---|
| **Men** | 1/50 | | | 1.0 | |
| calc'd | 2.4 | | | 3.0 | |
| rounded up | 3 | | | 4 | |
| **Women** | 1/50 | | | 1/40 | |
| calc'd | 2.4 | | | 3.0 | |
| rounded up | 3 | | | 4 | |
| Total M&W | 6 | | | 8 | |

**01 Basement**

**Plumbing Fixtures Provided**

| | W.C. | Urinal | Lav. |
|---|---|---|---|
| **Men** | 3 | 2 | 3 |
| **Women** | 3 | | 2 |
| **Unisex** | | | |
| **Holding** (not counted) | | | |
| Total M&W | 6 | 2 | 5 |

**First Floor**
Total Occupants 635.57 — Per Sex 317.787

**Plumbing Fixtures Required**

| | W.C. | +1 | Urinal | Lav. | +1 |
|---|---|---|---|---|---|
| **Men** | 1/50 | | | 1/40 | |
| calc'd | 6.4 | | | 7.9 | |
| rounded up | 5 | | | 6 | |
| **Women** | 1/50 | | | 1/40 | |
| calc'd | 6.4 | | | 7.9 | |
| rounded up | 5 | | | 6 | |
| Total M&W | 10 | | | 12 | |

**First Floor**

**Plumbing Fixtures Provided**

| | W.C. | Urinal | Lav. |
|---|---|---|---|
| **Men** | 5 | 4 | 5 |
| **Women** | 12 | | 8 |
| **Unisex** | 4 | | 4 |
| **Holding** (not counted) | 1 | | |
| Total M&W | 21 | 4 | 17 |

**Second Floor**
Total Occupants 772.14 — Per Sex 386.071

**Plumbing Fixtures Required**

| | W.C. | +1 | Urinal | Lav. | +1 |
|---|---|---|---|---|---|
| **Men** | 1/50 | | | 1/40 | |
| calc'd | 7.7 | | | 9.7 | |
| rounded up | 7 | | | 9 | |
| **Women** | 1/50 | | | 1/40 | |
| calc'd | 7.7 | | | 9.7 | |
| rounded up | 7 | | | 9 | |
| Total M&W | 14 | | | 18 | |

**Second Floor**

**Plumbing Fixtures Provided**

| | W.C. | Urinal | Lav. |
|---|---|---|---|
| **Men** | 5 | 1 | 3 |
| **Women** | 6 | | 3 |
| **Unisex** | 15 | | 15 |
| **Holding** (not counted) | 2 | | |
| Total M&W | 26 | 1 | 21 |

**Third Floor**
Total Occupants 762.10 — Per Sex 381.05

**Plumbing Fixtures Required**

| | W.C. | +1 | Urinal | Lav. | +1 |
|---|---|---|---|---|---|
| **Men** | 1/50 | | | 1/40 | |
| calc'd | 7.6 | | | 9.5 | |
| rounded up | 7 | | | 8 | |
| **Women** | 1/50 | | | 1/40 | |
| calc'd | 7.6 | | | 9.5 | |
| rounded up | 7 | | | 8 | |
| Total M&W | 14 | | | 16 | |

**Third Floor**

**Plumbing Fixtures Provided**

| | W.C. | Urinal | Lav. |
|---|---|---|---|
| **Men** | 4 | 2 | 4 |
| **Women** | 6 | | 4 |
| **Unisex** | 21 | | 21 |
| **Holding** (not counted) | 3 | | |
| Total M&W | 31 | 2 | 29 |

**Fourth Floor**
Total Occupants 745.07 — Per Sex 372.533

**Plumbing Fixtures Required**

| | W.C. | +1 | Urinal | Lav. | +1 |
|---|---|---|---|---|---|
| **Men** | 1/50 | | | 1/40 | |
| calc'd | 7.5 | | | 9.3 | |
| rounded up | 7 | | | 9 | |
| **Women** | 1/50 | | | 1/40 | |
| calc'd | 7.5 | | | 9.3 | |
| rounded up | 7 | | | 9 | |
| Total M&W | 14 | | | 18 | |

**Fourth Floor**

**Plumbing Fixtures Provided**

| | W.C. | Urinal | Lav. |
|---|---|---|---|
| **Men** | 5 | 3 | 5 |
| **Women** | 8 | | 5 |
| **Unisex** | 14 | | 14 |
| **Holding** (not counted) | 3 | | |
| Total M&W | 27 | 3 | 24 |

**Fifth Floor**
Total Occupants 550.87 — Per Sex 275.435

**Plumbing Fixtures Required**

| | W.C. | +1 | Urinal | Lav. | +1 |
|---|---|---|---|---|---|
| **Men** | 1/50 | | | 1/40 | |
| calc'd | 5.5 | | | 6.9 | |
| rounded up | 5 | | | 6 | |
| **Women** | 1/50 | | | 1/40 | |
| calc'd | 5.5 | | | 6.9 | |
| rounded up | 5 | | | 6 | |
| Total M&W | 10 | | | 12 | |

**Fifth Floor**

**Plumbing Fixtures Provided**

| | W.C. | Urinal | Lav. |
|---|---|---|---|
| **Men** | 4 | 2 | 4 |
| **Women** | 5 | | 4 |
| **Unisex** | 12 | | 12 |
| **Holding** (not counted) | 3 | | |
| Total M&W | 21 | 2 | 20 |

**Sixth Floor - Mechanical**
Total Occupants 11.09 — Per Sex 5.5448

**Plumbing Fixtures Required**

| | W.C. | +1 | Urinal | Lav. | +1 |
|---|---|---|---|---|---|
| **Men** | 1/50 | | | 1/40 | |
| calc'd | 0.1 | | | 0.1 | |
| rounded up | | | | | |
| **Women** | 1/50 | | | 1/40 | |
| calc'd | 0.1 | | | 0.1 | |
| rounded up | | | | | |
| Total M&W | 0 | | | 0 | |

**Sixth Floor - Mechanical**

**Plumbing Fixtures Provided**

| | W.C. | Urinal | Lav. |
|---|---|---|---|
| **Men** | 0 | | 0 |
| **Women** | 0 | | 0 |
| **Unisex** | 0 | | 0 |
| **Holding** (not counted) | 0 | | |
| Total M&W | 0 | 0 | 0 |

| | | | | | |
|---|---|---|---|---|---|
| Building Total M & W | 68 | | | 84 | |
| | | | | 132 | 14 | 116 |

# PLUMBING FIXTURE CALC.S
SCALE: NTS

TDG Architecture

March 12, 2020

**JUDICIAL BUILDING SOUTH TOWER**
270 South Tejon Street
Colorado Springs, CO

**A-3 Occupancy**
Total Occupants 2227.01 — Per Sex 1113.51

**Plumbing Fixtures Required**

| | W.C. | Urinal | Lav. |
|---|---|---|---|
| **Men** | 1/125 | | 1/200 |
| calc'd | 8.91 | | 5.57 |
| **Women** | 1/65 | | 1/200 |
| calc'd | 17.13 | | 5.57 |
| Total M&W | 26.04 | | 5.57 |

**E Occupancy**
Total Occupants 34.48 — Per Sex 17.2411

**Plumbing Fixtures Required**

| | W.C. | Urinal | Lav. |
|---|---|---|---|
| **Men** | 1/50 | | 1/50 |
| calc'd | 0.34 | | 0.34 |
| **Women** | 1/50 | | 1/50 |
| calc'd | 0.34 | | 0.34 |
| Total M&W | 0.69 | | 0.69 |

**B Occupancy**
Total Occupants 1465.85 — Per Sex 732.924

**Plumbing Fixtures Required**

| | W.C. | +1 | Urinal | Lav. | +1 |
|---|---|---|---|---|---|
| **Men** | 1/50 | | | 1/40 | |
| calc'd | 14.66 | | | 18.32 | |
| add +1 | 15.66 | | | 19.32 | |
| **Women** | 1/50 | | | 1/40 | |
| calc'd | 14.66 | | | 18.32 | |
| add +1 | 15.66 | | | 19.32 | |
| Total M&W | 31.32 | | | 38.65 | |

**Totals**

**Plumbing Fixtures Required**

| | W.C. | Urinal | Lav. |
|---|---|---|---|
| **Men** | | | |
| total | 24.91 | | 25.24 |
| rounded up | 25 | | 26 |
| **Women** | | | |
| total | 33.13 | | 25.24 |
| rounded up | 34 | | 26 |
| Total M&W | 59 | | 52 |

**Totals**

**Plumbing Fixtures Provided**

| | W.C. | Urinal | Lav. |
|---|---|---|---|
| **Men** | | | |
| total | 26 | 14 | 24 |
| **Women** | 40 | | 26 |
| total | | | |
| **Unisex** | 66 | | 66 |
| total | | | |
| Total | 132 | 14 | 116 |

# PLUMBING FIXTURE CALC.S OVERALL
SCALE: NTS

NOTE: REDUCTION OF PLUMBINGFIXTURES DOES NOT REGUDE REQUIRED PLUMBING FIXTURES

9/11/2020

**REVISIONS**

| | DATE | FOR |
|---|---|---|
| 1 | | |
| 2 | | |
| 3 | | |
| 4 | | |

STATE OF COLORADO — MARK W. TREMMEL — B-1938 — LICENSED ARCHITECT

TDG Architecture
201 East Las Animas Street, Suite 113
Colorado Springs, CO 80903
719.623.5641 (Phone)
719.623.5643 (Fax)

EL PASO COUNTY

**EL PASO COUNTY**
**JUDICIAL BUILDING SOUTH**
**SECOND FLOOR**
**RESTROOM REMODEL**
**270 SOUTH TEJON STREET**
**COLORADO SPRINGS, CO 80903**

**OCCUPANCY LOAD + PLUMBING FIXTURE CALCULATIONS**

**DATE: 09/10/2020**
**DRAWN BY: TDG**
**CHECKED BY: TDG**
**PROJECT NO: 20110**
**SHEET NO:**

# G0.1

GENERAL REQUIREMENTS

SUMMARY OF WORK:
1. Project Identification: EPC JUDICIAL BUILDING SOUTH RESTROOM REMODEL
a) Location: 270 SOUTH TEJON STREET
b) Tenant: EL PASO COUNTY

2. Contract Documents: AS LISTED

3. The Work consists of full services architectural design and construction documentation for tenant finish work as indicated in the Contract Documents.

Note: The General Contractor is responsible for payment on all permits required.

Building Standard Materials and Products: Provide building standard material and products as indicated in the technical specifications and on the Drawings, unless otherwise noted.

Contractor's Use of Premises: During construction, Contractor shall have limited use of building as indicated. Contractor's use of premises is limited only by Owner's right to perform work or employ other contractors on portions of Project. Contractor is responsible to coordinate access, work, and use of the freight elevator with Building Management.

Contract Modification Procedures: Upon the Owner's approval of a proposal from the Contractor, submitted either in response to a Proposal Request issued by the Architect or as a request for change from the Contractor, the Architect and tenant will approve a Change Order Request, for all changes to the Contract Sum or Contract Time.

Payment Procedures:
1. Submit a Schedule of Values, which breaks down the Contract Sum into at least one line item for each technical Specification Heading. Correlate the Schedule of Values with the Contractor's Construction Schedule.
2. Submit 3 copies of each Application for Payment, in accordance with the schedule established in the Agreement.
3. For the second Application through the Application submitted at Substantial Completion, submit partial releases of liens from each subcontractor or supplier for whom amounts were requisitioned on the previous payment.

Coordination: Progress meetings will be held at Project site every week. Owner, Architect, Contractor, and each subcontractor or other entity concerned with current progress or involved with planning or coordination of future activities, shall attend. Minutes of each meeting will be prepared by Contractor, and distributed to all parties present.

Cutting and Patching: Do not cut structural members without prior written approval of Structural Engineer unless indicated on design-build documents. For patching, provide materials whose installed performance will equal or surpass that of existing materials. For exposed surfaces, provide or finish materials to visually match existing adjacent surfaces to the fullest extent possible.

Submittal Procedures:
1. Construction Schedule: Submit [three (3)] copies of Construction Schedule to the Architect for review, [one (1)] copy will be returned to the Contractor. Construction Schedule shall be bar-chart format.
2. Coordinate submittal preparation with Construction Schedule, fabrication lead-times, other submittals and activities that require sequential operations.
3. No extension of Contract Time will be authorized due to failure to transmit submittals in time to permit processing sufficiently in advance of when materials are required in the Work.
4. Prepare submittals by placing a permanent label on each for identification. Provide a label to record review and approval markings and action taken. Include the following information on the label:
a) Project name.
b) Date.
c) Name and address of Contractor.
d) Name and address of subcontractor and supplier.
e) Title of appropriate technical Specification Heading.
5. Product Data: Submit [three (3)] copies and mark each copy to show applicable choices and options.
6. Shop Drawings: Submit newly prepared information drawn to scale. Indicate deviations from Contract Documents. Do not reproduce Contract Documents or copy standard information. Submit 1 electronic/digital copy or 1 reproducible print and 1 blue- or black-line print on sheets at least 8-1/2 by 11 inches but no larger than 30 by 42 inches. Architect will return the reproducible print.
7. Samples: Submit [three (3)] sample finishes as specified and identical with the material proposed. Where variations are inherent in the material, submit at least [three (3)] units that show limits of the variations. Include product name or name of the manufacturer.
8. Architect will review each submittal, mark as appropriate to indicate action taken, and return copies less those retained.

Temporary Facilities and Controls:
1. Standards: Comply with NFPA 241, "Standard for Safeguarding Construction, Alterations, and Demolition Operations"; ANSI A10 Series standards for "Safety Requirements for Construction and Demolition"; and NECA Electrical Design Library's "Temporary Electrical Facilities." Electrical service shall be in accordance with NEMA, NECA, and UL standards and regulations for temporary electric service. Install service in compliance with NFPA 70
2. Temporary Utilities:
a) Use of the Owner's existing sanitary facilities will be permitted, so long as facilities are cleaned and maintained in a condition acceptable to the Owner. At Substantial Completion, restore these facilities to the condition prevalent at the time of initial use

3. Temporary Controls:
a) Provide temporary barricades, warning signs, and lights to protect the public and construction personnel from construction hazards.

Product Requirements: The Owner and Architect may consider substitutions of specified materials which provide a savings in Contract Sum and/or Time. The Contract Sum and Time savings shall be identified at time of submittal. The request for substitution shall be submitted in reasonable and timely manner for review, as not to delay construction. Substitution submittals shall include product information, test data, samples (if applicable), delivery time, and cost information. If deemed acceptable by the Owner and Architect, the substitution submitted may be used by the Contractor. Acceptance of the substitution by the Owner and Architect does not relieve the Contractor of responsibility in performance or workmanship in relation to the substitution. The required warranties of any item of construction shall not be modified by substitutions.

Examination and Preparation: Examine substrates and conditions for compliance with manufacturer's written requirements including, but not limited to, surfaces that are sound, level, and plumb; substrates within installation tolerances; surfaces that are smooth, clean, and free of deleterious substances; and application conditions within environmental limits. Do not proceed with installation until unsatisfactory conditions have been corrected. Prepare substrates and adjoining surfaces according to manufacturer's written instructions.

Installation: Comply with manufacturer's written instructions for installation. Anchor each product securely in place, accurately located and aligned. Clean exposed surfaces and protect from damage. If applicable, prepare surfaces for field finishing.

Final Cleaning: Clean each surface or item as follows before requesting inspection for certification of Substantial Completion:
1. Remove labels that are not permanent.
2. Clean transparent materials, including mirrors. Remove excess glazing compounds. Replace chipped or broken glass.
3. Clean exposed finishes to a dust-free condition, free of stains, films, and foreign substances. Leave concrete floors broom clean.
4. Vacuum carpeted surfaces and wax resilient flooring.

Closeout Submittals:
1. Record Drawings: Maintain a set of Contract Drawings as Record Drawings. Mark to show installation that varies from the Work originally shown.
2. Operation and Maintenance Data: Organize data into 3-ring binders, with pocket folders for folded sheet information.
3. Submit one (1) copy of each of the above to the Architect for review.

Closeout Procedures:
1. Request Substantial Completion inspection once the following are complete:
a) Advise Owner of pending insurance changeover requirements.
b) Submit Record Drawings, maintenance manuals, warranties, and similar record information.
c) Deliver spare parts, extra stock, and similar items.
d) Complete startup testing of systems and instruction of operation and maintenance personnel.
e) Remove temporary facilities and controls.
f) Complete final cleanup.
g) Touch up, repair, and restore marred, exposed finishes.
h) Obtain final inspections from authorities having jurisdiction.
i) Obtain certificate of occupancy.
2. Upon receipt of a request for inspection, Architect will proceed with inspection or advise Contractor of unfilled requirements. Architect will prepare the Certificate of Substantial Completion after inspection or advise Contractor of items that must be completed or corrected before the certificate will be issued.
3. Arrange for each installer of equipment that requires operation and maintenance to provide instruction to Owner's personnel.

4. Warranties:
a) Submit written warranties to the Architect prior to the date certified for Substantial Completion. If the Architect's Certificate of Substantial Completion designates a commencement date for warranties other than the date of Substantial Completion for the Work, or a designated portion of the Work, submit written warranties upon request of the Architect.

b) When the Contract Documents require the Contractor, or the Contractor and a subcontractor, supplier or manufacturer to execute a special warranty, prepare a written document that contains appropriate terms and identification, ready for execution by the required parties. Submit a draft to the Owner, through the Architect, for approval prior to final execution.
c) At Final Completion compile [two (2)] copies of each required warranty properly executed by the Contractor, or by the Contractor, subcontractor, supplier, or manufacturer. Organize the warranty documents into an orderly sequence based on each technical Specification Heading.

5. Request inspection for certification of final acceptance and final payment, once the following are complete:
a) Submit final payment request with releases of liens and supporting documentation. Include insurance certificates.
b) Submit a copy of the Substantial Completion inspection list stating that each item has been completed or otherwise resolved for acceptance.
c) Submit final meter readings for utilities, a record of stored fuel, and similar data as of the date of Substantial Completion.
d) Submit consent of surety to final payment.
6. Architect will reinspect the Work on receipt of notice that the Work has been completed.
7. On completion of reinspection, Architect will prepare a certificate of final acceptance. If the Work is incomplete, Architect will advise Contractor of the Work that is incomplete or obligations that have not yet been fulfilled.
8. AutoCad generated "as-builts" will be required from the GC upon completion of the project.

SELECTIVE DEMOLITION

Unless otherwise indicated, demolished materials become Contractor's property. Comply with EPA regulations and disposal regulations of authorities having jurisdiction. Conduct demolition without disrupting Owner's occupation of the building.

Items indicated to be removed and salvaged remain the Owner's property. Remove, clean, and pack or crate items to protect against damage. Identify contents of containers and deliver to Owner's designated storage area.

Remove, salvage, relocate and reinstall items as indicated on Drawings.

All light switches, telephone, electrical, CRT outlets, etc. indicated to be removed or relocated shall be completely removed. Patch and apply finish indicated. A cover plate will not be acceptable.

Maintain and protect existing utilities to remain in service before proceeding with demolition, providing bypass connections to other parts of the building. Locate, identify, shut off, disconnect, and cap off utility services to be demolished. Protect remaining walls, ceilings, floors, and exposed finishes. Erect and maintain dustproof partitions during construction. Cover and protect furniture, fixtures and equipment. Promptly patch and repair holes and damaged surfaces of building caused by demolition. Restore exposed finishes of patched areas and extend finish restoration into remaining adjoining construction. Promptly remove demolished materials from Owner's property and legally dispose of them. Do not burn demolished materials. Coordination of work that produces dust and or noise is mandatory. Both Colorado Springs Utilities and the Building Management should be notified when this work will occur to ensure employee safety and reduce disruption both in the area of work and surrounding.

INTERIOR ARCHITECTURAL WOODWORK

Submit Shop Drawings and Samples showing the full range of colors, textures, and patterns available for each type of finish.
Quality Standard: Architectural Woodwork Institute's "Architectural Woodwork Quality Standards."

Materials:
1. Hardboard: AHA A135.4.
2. Medium-Density Fiberboard: ANSI A208.2.
3. Particleboard: ANSI A208.1, Grade M-2.
4. Softwood Plywood: PS 1.
5. Hardwood Plywood and Face Veneers: HPVA HP-1.
6. High-Pressure Decorative Laminate: NEMA LD 3.

Cabinet Hardware and Accessories:
1. Cabinet Hardware:
a) Hinges: Blum fully concealed Module 90 series or equal for frameless type construction.
~~b) Pulls: Epco MC 402-5-SS-5" wire type or equal.~~ Per Interior Design Specifications
c) Drawer guides – KV 1284 Series or equal.
2. Exposed Hardware Finishes: For exposed hardware, provide finish that complies with BHMA A156.18 for BHMA code number indicated.
a) Finish: Satin Chrome: BHMA 626 or BHMA 652.
3. Furring, Blocking, Shims, and Hanging Strips: Fire-retardant-treated lumber, kiln dried to 15 percent moisture content.

Interior Woodwork:
1. Backout or groove backs of flat trim members, kerf backs of other wide, flat members, except for members with ends exposed in finished Work.
2. Interior Standing and Running Trim for Transparent Finish: Premium Grade.

Laminate-Clad Cabinets (Plastic-Covered Casework): Custom Grade.
1. AWI Type of Cabinet Construction: Flush overlay.
2. WIC Construction Style: Style A, Frameless.
3. WIC Door and Drawer Front Style: Flush overlay.
4. Laminate Cladding: Horizontal surfaces other than tops, GP-50; postformed surfaces, PF-42; vertical surfaces, GP-28; Edges, GP-50; semiexposed surfaces, CL-20.

Plastic-Laminate Countertops: Custom Grade.
1. Laminate Grade: GP-50.
2. Grain Direction: Parallel to cabinet fronts.
3. Edge Treatment: Same as laminate cladding on horizontal surfaces.

Shelving:
1. Prefinished shelving shall be Kortron R/B 45 lb. density, color – white (UNO), surfaced both sides with finished exposed edges of matching plastic tee mold.
2. Shelf standards/supports shall be KV 255/256 for cabinets, KV87-187A1 with brackets for shelves at walls and closets.

Finishing Of Interior Architectural Woodwork:
1. Transparent Finish: AWI Finish System TR-5, catalyzed vinyl lacquer.
2. Transparent Finish: WIC Finish System #1d., vinyl lacquer (catalyzed).

Installation:
1. Condition woodwork to prevailing conditions before installing.
2. Install woodwork to comply with AWI Section 1700 for grade specified.
3. Install woodwork level, plumb, true, and straight. Shim as required with concealed shims. Install to a tolerance of 1/8 inch in 96 inches (3 mm in 2400 mm) for level and plumb.
4. Scribe and cut woodwork to fit adjoining work, seal cut surfaces, and repair damaged finish at cuts.
5. Install trim with minimum number of joints possible, using full-length pieces to the greatest extent possible. Stagger joints in adjacent and related members.
6. Anchor countertops securely to base units. Seal space between backsplash and wall.
7. Anchor paneling to supports with concealed panel-hanger clips and by blind nailing on back-up strips, splined-connection strips, and similar associated trim and framing.

BUILDING INSULATION

Submit Product Data for each type of insulation product specified.

Surface-Burning Characteristics: ASTM E 84, flame-spread ratings of 25 and smoke-developed ratings of 50.

Mineral-Fiber-Blanket Insulation: ASTM C 665, Type I, unfaced with fibers manufactured from glass, slag wool, or rock wool and with R-value of 11.

FIRESTOPPING

Submit Product Data and product certificates signed by manufacturer certifying compliance with specified requirements.

Provide firestopping systems with fire-resistance ratings indicated by reference to UL designations as listed in its "Fire Resistance Directory," or to designations of another testing agency acceptable to authorities having jurisdiction.

Provide through-penetration firestopping systems with required F-ratings, as determined according to ASTM E 814, but not less than the fire-resistance rating of the constructions penetrated.

Provide through-penetration firestopping systems with T-ratings as well as F-ratings, as determined according to ASTM E 814, where indicated.

For exposed firestopping, provide products with flame-spread ratings of less than 25 and smoke-developed ratings of less than 450, as determined according to ASTM E 84.

Firestopping:
1. The manufacturers and products listed are approved for use.
a) Dow Corning: 2000 Series Sealant, Foam and Intumescent Wrap.
b) General Electric: 100 Sealant, 200 Foam.
c) 3M Fire Barrier: CP25 Sealants, Putty MPP and MPS, FS195 Wrap Strip.
d) USG.

Firestopping Materials, General:
1. Commercially manufactured products complying with the following minimum requirements.
a) Flame Spread: 25 Maximum in accordance with ASTM E 84.
b) Smoke Density: 50 Maximum in accordance with ASTM E 84.
c) Fuel Contribution: 25 maximum in accordance with ASTM E 84.
d) Nontoxicity: Nontoxic to human beings at all stages of application and during fire conditions.
2. Manufacturer's recommended damming materials as back-up for applied firestopping compounds.

Installation: Install firestopping systems to comply with manufacturer's written instructions and with requirements listed in the testing agency's directory for the indicated fire-resistance rating.

STEEL DOORS AND FRAMES

Submit Product Data and door schedule.

Comply with ANSI/SDI 100 and NFPA 80 for fire-rated door assemblies. Provide assemblies identical to those tested per ASTM E 152, and labeled and listed by UL, Warnock Hersey, or another testing and inspecting agency acceptable to authorities having jurisdiction.

Cold-Rolled Steel Sheets: Carbon steel complying with ASTM A 366 (ASTM A 366M), commercial quality, or ASTM A 620 (ASTM A 620M), drawing quality, special killed.

Interior Door Frames: Provide units with mitered or coped and continuously welded corners, formed from 0.0478-inch thick, cold-rolled steel for openings 48 inches or less in width and from 0.0598-inch thick steel for openings more than 48 inches in width.

Prepare doors and frames to receive mortised and concealed hardware according to SDI 107.

Comply with NAAMM's "Metal Finishes Manual for Architectural and Metal Products" for recommendations relative to applying finishes.

FLUSH WOOD DOORS

Submit samples for factory-finished doors.

Interior Solid Core Doors for Transparent Finish: Custom Grade, 5- ply, glued-block core. Faces shall match extg. species and quality.

Interior Solid Core Doors for Opaque Finish: Custom Grade, 5- ply, glued-block. Faces shall be medium-density overlay.

Doors with Veneers: Book and balance matched.

Pair matching: Continuous matching for doors with transoms.

Fabrication and Finishing:
1. Factory fit doors to suit frame-opening sizes indicated and to comply with referenced quality standard.
2. Factory machine doors for hardware that is not surface applied.
3. Finish wood doors with NWWDA Standard grade, System 7, water-reducible acrylic lacquer finish.

DOOR HARDWARE

Submit hardware schedule. NOTE: Schlage Everest hardware, no substituitions.
GC to key cylinders. GC to install. GC to coordinate with EPC Security.

For fire-rated openings provide hardware tested and listed by UL or FM (NFPA 80). On panic exit devices provide UL or FM label indicating "Fire Exit Hardware."

Door Hardware: As indicated in the Hardware Schedule on the Drawings.
1. Nonremovable hinge pins for exterior and public interior exposure.
2. Cylinders with 6-pin tumblers.
3. Dogging feature on non-fire-rated exit devices.
4. Key locks to Owner's existing master-key system. Provide key control system, including cabinet.

GLAZING

Submit Product Data and Samples.

Comply with written instructions of glass product manufacturers; FGMAs "Glazing Manual"; and publications of AAMA, LSGA, and SIGMA..

Fire-Resistance-Rated Assemblies: Products identical to those tested per ASTM E 152 for doors and ASTM E 163 for window assemblies; both labeled and listed by UL or another testing and inspecting agency acceptable to authorities having jurisdiction.

Glass:
1. Float Glass: ASTM C 1036, Type I, Class 1 (clear), and Quality q3.
2. Heat-Treated Float Glass: ASTM C 1048, Condition A (uncoated), Type I, Class 1 (clear), Quality q3, Kind FT (fully tempered) u.n.o.

SPECIALTY GLASS @ PRIVATE OFFICES

Match existing

RECESSED ELECTRONIC PROJECTION SCREEN

Submit Product Data and color Samples.

1. Screen Finish (Matt) color: white
2. Size: As noted on the drawings

TACKABLE FABRIC PANELS

Submit Product Data and color Samples.

Acoustical wall panels shall be manufactured to match existing thickness and qualities of the existing panels.

Sizes as shown on dwgs.
Edge profile – Small Bevel.
Panel Finish: To match existing panels.
Mounting via mechanical clip Mounting "Type A" per manufacturer.
Adhesive, fasteners and standard continuous wall leveling angle are to be supplied by the contractor. All other mountings are supplied by manufacturer.

GYPSUM BOARD ASSEMBLIES

Where STC-rated assemblies are required, provide materials and construction identical to assemblies whose STC ratings were determined according to ASTM E 90 and classified according to ASTM E 413 by a qualified independent testing agency.

Where fire-resistance-rated assemblies are required, provide materials and construction identical to assemblies tested according to ASTM E 119 by an independent testing and inspecting agency acceptable to authorities having jurisdiction.

Metal Framing and Supports:
1. Steel framing components for suspended and furred ceilings complying with ASTM C 645 and ASTM C 754.
a) Wire Ties: ASTM A 641 (ASTM A 641M), Class 1 zinc coating, soft temper, 0.062 inch thick.
b) Hangers: Wire, ASTM A 641 (ASTM A 641M), Class 1 zinc coating, soft temper, 0.162-inch diameter.
c) Carrying Channels: Cold-rolled steel, 2 inches.
d) Furring Channels: 3/4-inch deep, cold-rolled channels.
2. Steel framing for partitions complying with ASTM C 645.
a) Studs and Runners: In depth indicated and 0.0179-inch thick, unless otherwise indicated.
b) Rigid Hat-Shaped Furring Channels: In depth indicated and 0.0179-inch thick, unless otherwise indicated.
c) Furring Brackets: Adjustable serrated-arm type fabricated from corrosion-resistant steel sheet 0.0329-inch thick.
d) Provide double 20 gage studs at each door jamb.
e) At perimeter of building, all partitions shall be centered on window mullions or column centerlines unless otherwise indicated.
f) Alignment of finished face of partition with finished face of existing column or partition is indicated on the drawing by the note "align".

Gypsum Board:
1. Gypsum Wallboard: ASTM C 36, in thickness indicated, with manufacturer's standard edges. Type X, where required .

Accessories:
1. Accessories for Interior Installation: Cornerbead, edge trim, and control joints complying with ASTM C 1047, formed from steel sheet zinc coated by hot-dip process or rolled zinc.
2. Acoustical Sealant for Exposed and Concealed Joints: Nonsag, paintable, nonstaining latex sealant complying with ASTM C 834.
3. Sound-Attenuation Blankets: Unfaced mineral-fiber-blanket insulation complying with ASTM C 665 for Type I.
Finishing Gypsum Board Assemblies: In accordance with GA-214; Level 4 finish, unless otherwise indicated; Level 1 finish for concealed areas, unless a higher level of finish is required for fire-resistance-rated assemblies; and Level 2 finish where panels form substrates for tile.

SEALING AND FINISHING RESILIENT FLOORING

Strip flooring, then apply 2 coats (min) of a sealer approved by manufacturer and then 3 coats (min) of a finish approved by the manufacturer. Follow all directions on products recommended by the manufacturer.

RESILIENT WALL BASE AND ACCESSORIES

Submit Product Data, color Samples.

Deliver to Owner at least 10 linear feet for each 500 linear feet or fraction thereof, of each type and color of resilient wall base installed.

Provide resilient rubber wall base and accessories as scheduled on the Drawings.

Apply resilient rubber wall base to walls in 80 feet lengths, columns, pilasters, casework, and other permanent fixtures in rooms or areas where base is required. Form wall base corners from straight pieces. Install reducer strips at edges of flooring at dissimilar materials and exposed concrete floors.

CARPET

Submit Product Data and color Samples.

Installer Qualifications: Engage an experienced Installer who is certified by the Floor Covering Installation Board (FCIB) or who can demonstrate compliance with FCIB certification program requirements.

Carpet and carpet cushions that have flame-spread and smoke-developed ratings of 25 or less and 450 or less, respectively, when tested according to ASTM E 84. Comply with CRI 104, Section 6, "Site Conditions."

Deliver to Owner full-width carpet equal to 5 percent of each type and color carpet installed, packaged with protective covering for storage.

Verify with Owner what attic stock is available for use on ALL carpet types prior to ordering new. If new carpet is required provide carpet as scheduled on the Drawings.

Comply with CRI 104, Section 8, "Direct Glue-Down".

Install carpet tiles such that there is no piece smaller than 10" at thresholds of doorway and there is no piece smaller than 6" in direct traffic areas. Float transition between new and existing tiles to eliminate thickness differential. Verify layout with Architect if conflicts or questions arise.

PAINTING

Submit Product Data and prepared color Samples.

Deliver to Owner a 1-gal. (3.8-L) container, properly labeled and sealed, of each color and type of finish coat paint used on Project.

Paint: Manufacturer's first-line quality paint material of the various coating types as specified and as indicated on the finish plan.

Comply with paint manufacturer's written instructions for surface preparation, environmental and substrate conditions, product mixing, and application.

Interior Paint Schedule:
1. Concrete Masonry Units:
a) Flat Acrylic: 2 coats over block filler.
b) Satin, Acrylic Enamel: 2 coats over block filler.
c) Semigloss, Alkyd Enamel: 2 coats over undercoat and filled surface.
2. Gypsum Board:
a) Flat Acrylic: 2 coats over primer.
b) Satin, Acrylic Enamel: 2 coats over primer.
c) Satin Alkyd Enamel: 2 coats over primer.
3. Acoustical Panel Ceiling: Flat, Acrylic-latex: 2 coats.
4. Woodwork and Hardboard:
a) Semigloss, Acrylic Enamel: 2 coats over primer.
b) Semigloss, Acrylic Enamel: 2 coats over wood undercoater.
c) Semigloss, Alkyd Enamel: 2 coats over primer.
5. Stained Woodwork:
a) Alkyd-Based, Satin Varnish: 2 coats clear-satin varnish over sealer and wood stain.
b) Waterborne, Satin Varnish: 2 coats clear-satin varnish over sealer and wood stain.
c) Water-Based, Full-Gloss, Varnish: 2 coats Full-Gloss varnish over sealer and wood stain.
d) Alkyd-Based Stain, Wax-Polished Finish: 3 coats paste wax over sealer and wood stain.
6. Natural-Finish Woodwork:
a) Alkyd-Based, Satin Varnish: 2 coats clear-satin varnish over sealer.
b) Waterborne, Satin Varnish: 2 coats clear-satin varnish over sealer.
c) Water-Based, Full-Gloss, Varnish: 2 coats Full-Gloss varnish over sealer.
d) Wax-Polished Finish: 3 coats paste wax over sealer.
7. Ferrous Metal:
a) Flat Acrylic: 2 coats over primer.
b) Low-Luster, Acrylic Enamel: 2 coats over primer.
c) Semigloss, Acrylic Enamel: One coat over undercoater and primer.
d) Semigloss, Alkyd Enamel: One coat over undercoater and primer.
e) Full-Gloss, Acrylic Enamel: 2 coats over primer.
f) Full-Gloss, Alkyd Enamel: 2 coats over undercoater and primer.

VISUAL DISPLAY MATERIAL
Submit Product Data and color Samples. All boards 8'w x 4'h unless noted otherwise.

Markerboards:
1. Materials: Walltalker Erase Rite Marker Surface; Color White, 54" Wide
2. Operation: Fixed.
3. Trim: Metal trim and tray, anodized finish. Match CSU standard.

ACOUSTICAL PANEL CEILINGS

Submit Product Data and material Samples.

Acoustical Panel Ceilings: Comply with ASTM E 1264 for Class A materials, as determined by testing identical products per ASTM E 84.

Acoustical Panels: Match existing size and finish, and adjacent ceiling height. NO SUBSTITUTIONS.

Ceiling Suspension Systems:
1. Direct-hung suspension system, with intermediate-duty structural classification according to ASTM C 635.
2. Size attachment devices for 5 times the design load indicated in ASTM C 635, Table 1, Direct Hung, unless otherwise indicated.
3. Zinc-coated carbon-steel wire hangers, braces, and ties complying with ASTM A 641 (ASTM A 641M), Class 1 zinc coating, soft temper.

Installation:
1. CISCA's "Ceiling Systems Handbook."
2. CISCA's "Recommendations for Direct-Hung Acoustical Tile and Lay-in Panel Ceilings."
3. ASTM C 636, "Standard for Ceiling Suspension System Installations."
4. U.B.C. Standard 47-18.

RESILIENT TILE FLOORING

Submit Product Data and color Samples.

Deliver to Owner at least 1 linear ft. of goods per every 50 linear ft. goods used or fraction thereof, of each type and color resilient goods installed.

Provide resilient floor rolled goods as scheduled on the Drawings.

Lay out rolled goods from center marks established with principal walls, discounting minor offsets, so widths at opposite edges of room are equal to one another.
Match color and pattern as exists in installation.

NOTE:
SPECIFICATIONS ARE GENERAL AND NOT ALL DIVISIONS ARE APPLICABLE TO THIS PROJECT. VERIFY WITH CONSTRUCTION DOCUMENTS AS TO WHICH APPLY.

8/11/2020

REVISIONS

| | DATE | FOR |
|---|---|---|
| 1 | | |
| 2 | | |
| 3 | | |
| 4 | | |

STATE OF COLORADO
MARK W. TREMMEL
B-1938
LICENSED ARCHITECT

TDG Architecture
201 East Las Animas Street, Suite 113
Colorado Springs, CO 80903
719.623.5641 (Phone)
719.623.5643 (Fax)

EL PASO COUNTY

EL PASO COUNTY
JUDICIAL BUILDING SOUTH
SECOND FLOOR
RESTROOM REMODEL
270 SOUTH TEJON STREET
COLORADO SPRINGS, CO 80903

ARCHITECTURAL SPECIFICATIONS

DATE: 09/10/2020
DRAWN BY: TDG
CHECKED BY: TDG
PROJECT NO: 20110
SHEET NO:
G0.2

## TOILET PARTITIONS:

1. NEW PAINTED METAL TOILET PARTITIONS TO BE FLOOR MOUNTED TO MATCH EXISTING TOILET PARTITIONS. PROVIDE SOLID BLOCKING AS REQUIRED PER MANUFACTURER'S REQUIREMENTS.
2. COLOR TO MATCH EXISTING. PROVIDE COLOR SAMPLES FOR SELECTION BY OWNER AND ARCHITECT.
3. PROVIDE GRAVITY HINGES. ADJUST TO HOLD DOOR IN THE CLOSED POSITION WHEN NOTE LATCHED.
4. PROVIDE EACH DOOR WITH ONE CAST ALLOY CHROME PLATED COAT HOOK AND BUMPER
5. PROVIDE LATCHING MECHANISM THAT MEET ICC/ANSI 117.1 2009 SECTION 309.4

## PLUMING FIXTURES:

NOTE:
Toilets are to be installed to ADA Standards 604.2, 308.2.2-308.3.2, 309.
Urinals are to be installed to ADA Standards 605.2-605.4
Sinks are to be installed to ADA Standards 606.2-606.5, 305, 306.2-306.3.5

## TOILET ACCESSORIES:

GRAB BARS:
AMERICAN SPECIALTIES, INC. - SERIES 3200, SIZE PER PLANS AND ELEVATIONS. SEE PLANS AND INT. ELEV. FOR LOCATIONS, SIZES AND MOUNTING HEIGHTS

TOILET PAPER DISPENSER
OWNER PROVIDED; CONTRACTOR INSTALLED. SEE INT. ELEV. FOR MOUNTING HEIGHTS.

PAPER TOWEL DISPENSER
OWNER PROVIDED; CONTRACTOR INSTALLED.SEE INT. ELEV. FOR MOUNTING HEIGHTS

SANITARY NAPKIN DISPOSAL
REUSE EXISTING. CONTRACTOR INSTALLED. SEE INT. ELEV. FOR MOUNTING HEIGHTS

TOILET SEAT COVER DISPENSER
REUSE EXISTING; CONTRACTOR INSTALLED. SEE INT. ELEV. FOR MOUNTING HEIGHTS

UNDER LAVATORY GUARD:
TURERO, INC. - HANDI LAV-GUARD

NOTE:
ABOVE ACCESSORIES ARE BASIS OF DESIGN AND CAN BE SUBSTITUTED FOR EQUAL IF APPROVED BY OWNER AND ARCHITECT. PROVIDE SUBSTITUTION SUBMITTAL REQUEST.

## INTERIORS:

A) PROVIDE NEW PAINT TO MATCH EXISTING. NEW PAINT @ WALLS, CEILING & DOOR FRAMES.
B) PATCH & REPAIR TILE TO MATCH EXISTING. CLEAN TILE TO LIKE NEW CONDITION. PATCH & REPAIR GROUT AS NECESSARY.
C) REFURBISH, CLEAN ANY REUSED FIXTURES & ACCESSORIES.

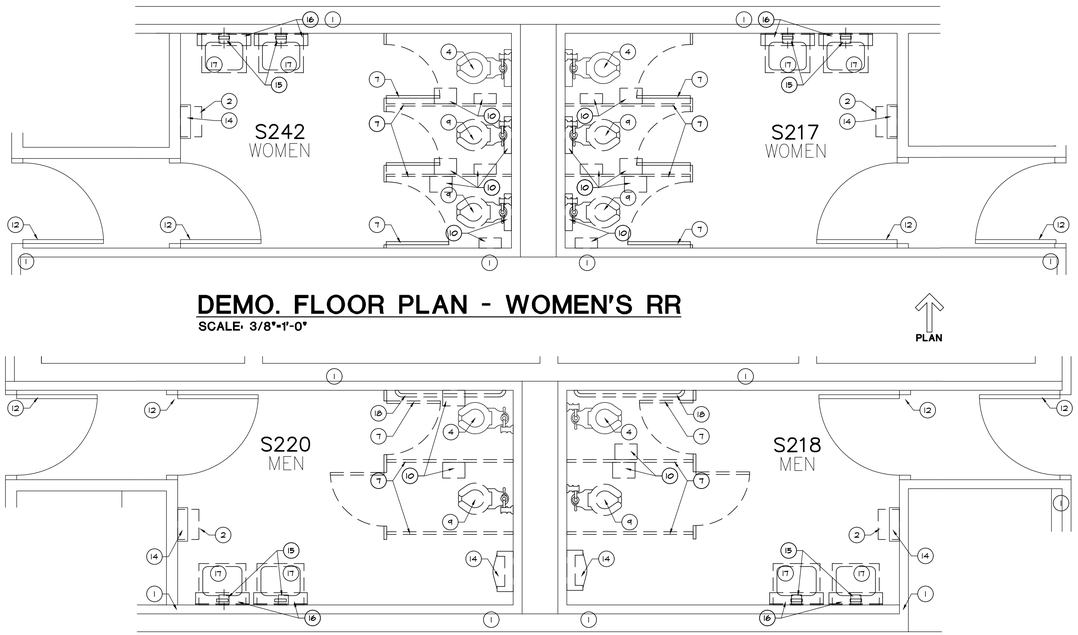


## DEMO. FLOOR PLAN - WOMEN'S RR

SCALE: 3/8"=1'-0"

PLAN

## DEMO. FLOOR PLAN - MEN'S RM

SCALE: 3/8"=1'-0"

## DEMOLITION FLOOR PLAN NOTES

1. EXISTING WALLS TO REMAIN, TYP.
2. EXISTING TOWEL DISPENSER TO REMOVED, PRESERVED FOR REUSE
3. UNUSED
4. EXISTING TOILET TO REMAIN, TYP.
5. EXISTING SOAP DISPENSER TO REMAIN, TYP.
6. EXISTING URINAL TO BE REMOVED
7. EXISTING TOILET PARTITION TO BE REMOVED SHOWN DASHED, TYP.
8. UNUSED.
9. EXISTING TOILET TO BE REMOVED.
10. EXISTING SEAT COVER DISPENSER, NAPKIN DISPOSAL AND TOILET DISPENSER TO BE REMOVED FOR RELOCATION
11. UNUSED
12. EXISTING INT. DOORS TO REMAIN, TYP.
13. UNUSED
14. EXISTING TRASH RECEPTACLE TO REMAIN. PRESERVE DURING CONSTR., RESTORE TO 'LIKE NEW' CONDITION
15. EXISTING SOAP DISPENSER TO BE REMOVED
16. EXISTING MIRROR AND SHELF TO BE REMOVED - PATCH AND REPAIR WALL AS NECESSARY
17. EXISTING SINK TO BE REMOVED - SHOWN DASHED, TYP.
18. EXISTING GRAB BARS TO BE REMOVED

## GENERAL DEMOLITION NOTES:

1. CONTRACTOR SHALL VERIFY ALL DIMENSIONS AND CONDITIONS ON THE SITE AND NOTIFY ARCHITECT OF ANY DISCREPANCIES PRIOR TO STARTING ANY WORK OR WHEN DISCREPANCIES REVEAL THEMSELVES.
2. ALL ELECTRICAL/TELEPHONE CONDUIT AND/OR PLUMBING WITHIN DEMOLISHED PARTITIONS AND/OR MILLWORK SHALL BE REMOVED TO THE POINT OF ORIGIN OR TERMINATED OR REMOVED UP TO A POINT REQUIRED FOR INTERFACE WITH NEW CONSTRUCTION. CONDUIT AND/OR PLUMBING SHALL NOT BE EXPOSED IN EITHER NEW OR EXISTING CONSTRUCTION.
3. ALL WALLS NOTED TO BE REMOVED SHALL BE FULLY REMOVED. NO PONY WALLS ABOVE CEILING.(U.N.O.) RE-ATTACHED/RELOCATE ANY ITEMS TO REMAIN WHICH MAY HAVE BEEN ATTACHED TO WALL.
4. PATCH AND REPAIR EXISTING CONSTRUCTION / FINISHES, REPAIR. PREPARE FOR NEW FINISHES AS REQUIRED.
5. CONTRACTOR TO VERIFY DISPOSAL OR STORAGE OF REMOVED EQUIPMENT SUCH AS APPLIANCES, PLUMBING FIXTURES, ETC. WITH OWNER.

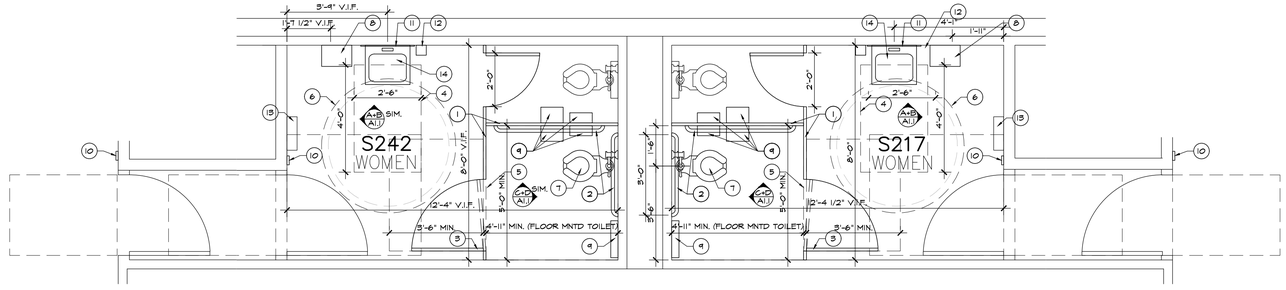


## CONSTR. FLOOR PLAN WOMEN'S RR

SCALE: 3/8"=1'-0"

PLAN

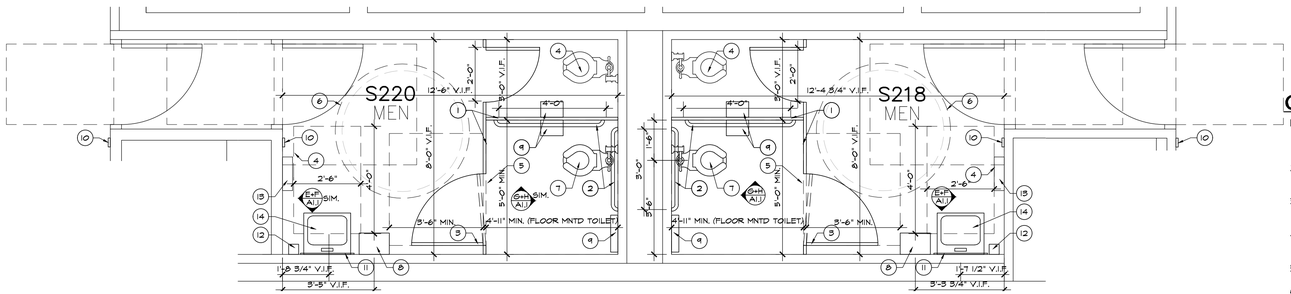


## CONSTR. FLOOR PLAN - MEN'S RM

SCALE: 3/8"=1'-0"

## CONSTRUCTION FLR. PLAN NOTES

1. NEW TOILET PARTITION
2. NEW GRAB BARS, SEE ELEVATIONS.
3. NEW TOILET PARTITION DOOR - 36" MIN. WIDTH
4. 30"X48" CLEAR FLOOR SPACE
5. 60"X 56" CLEAR FLOOR SPACE AT TOILET
6. 60" DIAMETER TURNING RADIUS
7. NEW ADA TOILET W. AUTOMATIC FLUSH SENSOR, CONSULT W/ EPC
8. RELOCATED TOWEL DISPENSER, SEE INT. ELEVATION
9. RELOCATED SEAT COVER DISPENSER, NAPKIN DISPOSAL AND TOILET DISPENSER, SEE INT. ELEVATION
10. NEW AUTOMATIC DOOR OPENER PUSH BUTTON
11. NEW MIRROR ABOVE SINK (IN MEN'S RM, SIZED TO ACCOMODATE ADJACENT RELOCATED PAPER TOWEL DISPENSER (ALLOWING FOR ALL REQUIRED CLEARANCES)
12. NEW LOCATION OF SOAP DISPENSER
13. EXISTING TRASH RECEPTACLE - REFURBISH TO 'LIKE NEW'
14. NEW ADA SINK

## GENERAL CONSTRUCTION NOTES:

1. THE CONTRACTOR SHALL SUPERVISE AND DIRECT THE WORK USING HIS/HER BEST SKILLS AND ATTENTION. THE CONTRACTOR SHALL BE SOLELY RESPONSIBLE FOR ALL CONSTRUCTION MEANS, METHODS, TECHNIQUES, SEQUENCES AND PROCEDURES AND FOR COORDINATING ALL PORTIONS OF THE WORK UNDER CONTRACT.
2. THE CONTRACTOR SHALL VERIFY ALL DIMENSIONS AND EXISTING CONDITIONS ON THE SITE AND NOTIFY ARCHITECT OF ANY DISCREPANCIES IN WRITING BEFORE STARTING ANY WORK.
3. PROVIDE NONCOMBUSTIBLE, FIRE RETARDANT TREATED WOOD BLOCKING IN WALLS AS REQUIRED FOR WALL MOUNTED MILLWORK, PANELS, EQUIPMENT, ACCESSORIES, SHELVING, WALL STOPS, AND FURNITURE. VERIFY LOCATION WITH FURNITURE VENDOR.
4. REPAIR FLOOR TO SMOOTH LEVEL SURFACE BEFORE INSTALLING NEW FLOORING. FLOAT FLOOR AS REQUIRED TO ELIMINATE ANY CHANGE IN FINISH ELEVATION BETWEEN ADJACENT MATERIALS. ALL FLOOR PREP TO BE INCLUDED IN PRICING.
5. VERIFY AVAILABILITY OF MATERIALS TO BE USED FROM BUILDING STOCK W/ BUILDING MANAGEMENT, IF APPLICABLE.
6. CONTRACTOR SHALL FIELD MEASURE EXISTING CONDITIONS PRIOR TO ORDERING, FABRICATING OR PERFORMING ANY NEW WORK. DEVIATIONS FROM CONDITIONS SHOWN ON THESE DRAWINGS SHALL BE REPORTED TO THE ARCHITECT. DIFFERING SITE CONDITIONS FROM THOSE ON THE PLANS WILL GENERALLY NOT BE CONSIDERED A BASIS FOR CONTRACT MODIFICATIONS. THE CONTRACTOR SHALL ALLOW FOR WORST CASE SITE CONDITIONS WHENEVER POSSIBLE.
7. ALL ADHESIVE USED IN CONSTRUCTING NEW FACILITY TO BE NON-TOXIC AND ENVIRONMENTALLY SAFE.
8. MAINTAIN ONE SET OF RED LINE AS-BUILT DRAWINGS AT THE JOB SITE AND SUBMIT TO THE ARCHITECT AT THE COMPLETION OF THE WORK.

9/11/2020

| REVISIONS | | |
|---|---|---|
| | DATE | FOR |
| △ | | |
| △ | | |
| △ | | |
| △ | | |

STATE OF COLORADO
MARK W. TREMMEL
B-1938
LICENSED ARCHITECT


TDG Architecture
201 East Las Animas Street, Suite 113
Colorado Springs, CO 80903
719.623.5641 (Phone)
719.623.5643 (Fax)


EL PASO COUNTY

EL PASO COUNTY
JUDICIAL BUILDING SOUTH
SECOND FLOOR
RESTROOM REMODEL
270 SOUTH TEJON STREET
COLORADO SPRINGS, CO 80903

DEMOLITION FLOOR PLAN
CONSTRUCTION FLOOR PLAN

DATE: 09/10/2020
DRAWN BY: TDG
CHECKED BY: TDG
PROJECT NO: 20110
SHEET NO:
A1.0

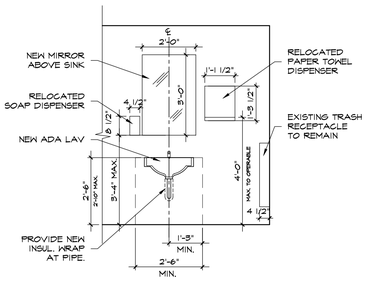


A A1.1 **WOMEN'S ADA SINK**
SCALE: 3/8" = 1'-0" FRONT ELEVATION

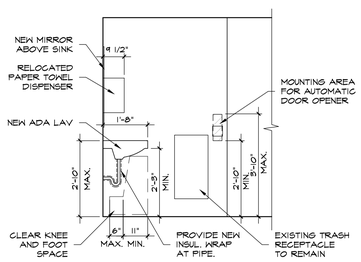


B A1.1 **WOMEN'S ADA SINK**
SCALE: 3/8" = 1'-0" SIDE ELEVATION

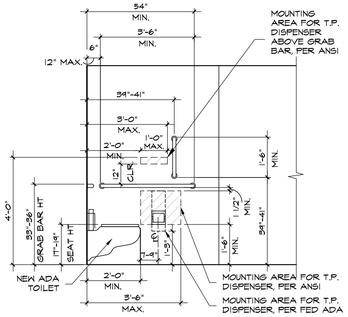


C A1.1 **WOMENS ADA TOILET**
SCALE: 3/8" = 1'-0" SIDE ELEVATION

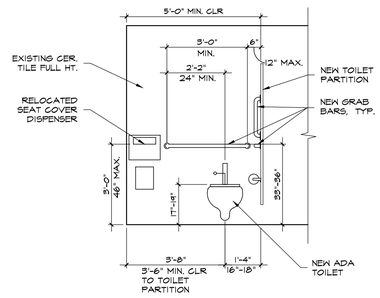


D A1.1 **WOMENS ADA TOILET**
SCALE: 3/8" = 1'-0" FRONT ELEVATION

## GENERAL FINISH NOTES:

1. MATCH EXISTING ADJACENT FINISHES, COLORS
2. PROVIDE 2 COATS ACRYLIC PAINT WITH MATCHING FINISH OVER PRIMER ON ALL DRYWALL SURFACES, (U.N.O.)
3. PROVIDE 2 COATS SEMI GLOSS ENAMEL OVER PRIMER ON ALL HOLLOW METAL FRAMES, (U.N.O.)
4. PATCH AND REPAIR DAMAGE TO GYP. BD. FROM DEMOLITION AND NEW CONSTRUCTION TO LIKE NEW CONDITION. REFINISH, RETEXTURE AND REPAINT AS NECESSARY.
5. ACCEPTABLE PAINT MANUF. SUBSTITUTIONS ARE SHERWIN-WILLIAMS, BENJAMIN MOORE & CO., DEVOE PAINT BRAND, KELLY MOORE PAINT CO. OTHER SUBSTITUTIONS REVIEWED UPON REQUEST.
6. ALL NEW PAINTS TO BE ZERO VOC.

## FINISH NOTES:

CERAMIC WALL TILE:
PATCH AND REPAIR TO MATCH EXISTING. REPLACEMENT TILE TO MATCH EXISTING AS CLOSE AN POSSIBLE. PROVIDE GROUT TO MATCH EXISTING. SEALANTS IF NECESSARY TO MATCH EXISTING TILE COLOR WHEN USED INSIDE TILE.
- SUBMIT COLOR SAMPLES TO OWNER AND ARCHITECT FOR REVIEW AND FINAL SELECTION.

CERAMIC FLOOR TILE:
PATCH AND REPAIR TO MATCH EXISTING. REPLACEMENT TILE TO MATCH EXISTING AS CLOSE AN POSSIBLE. PROVIDE GROUT TO MATCH EXISTING. SEALANTS IF NECESSARY TO MATCH EXISTING TILE COLOR WHEN USED AT TILE.
- SUBMIT COLOR SAMPLES TO OWNER AND ARCHITECT FOR REVIEW AND FINAL SELECTION.

TOILET PARTITIONS:
NEW TOILET PARTITIONS TO MATCH EXISTING FLOOR MOUNTED TOILET PARTITIONS. PROVIDE NEW SOLID BLOCKING PER MANUFACTURER'S RECOMMENDATIONS.
- SUBMIT COLOR SAMPLES TO OWNER AND ARCHITECT FOR REVIEW AND FINAL SELECTION.
- SUBMIT SHOP DRAWINGS FOR OWNER AND ARCHITECT REVIEW.

PAINT:
NEW PAINT TO MATCH EXISTING. PROVIDE EPOXY PAINT @ WALLS & CEILING, SEMI GLOSS @ DOOR FRAMES

CEILING:
PATCH AND REPAIR EXISTING CEILING DAMAGED BY BY DEMOLITION AND NEW CONSTRUCTION. MATCH EXISTING TEXTURE. PAINT TO MATCH EXISTING

WALLS:
PATCH AND REPAIR EXISTING WALLS DAMAGED BY BY DEMOLITION AND NEW CONSTRUCTION. MATCH EXISTING TEXTURE. PAINT TO MATCH.

GENERAL:
NEW WORK TO BLEND INTO EXISTING. FINISH TO NEAREST CORNER OR BREAK IN MATERIAL TYPE. PROVIDE J-STRIP AT EDGES OF GYP. BD. AGAINST DISSIMILAR MATERIALS. CAULK FOR NEAT APPEARANCE AND TO PREVENT WATER PENETRATION.

GENERAL WALL AND FLOOR TILE:
COMPLY WITH THE TILE INSTALLATION STANDARDS IN ANSI'S "SPECIFICATIONS FOR THE INSTALLATION OF CERAMIC TILE"
COMPLY WITH TCA'S "HANDBOOK FOR CERAMIC TILE INSTALLATION."

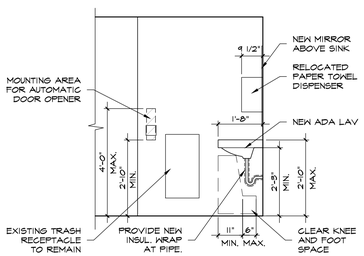


E A1.1 **MENS ADA SINK**
SCALE: 3/8" = 1'-0" FRONT ELEVATION

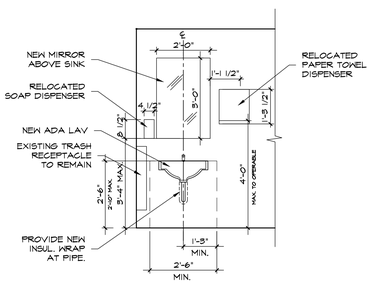


F A1.1 **MENS ADA SINK**
SCALE: 3/8" = 1'-0" SIDE ELEVATION

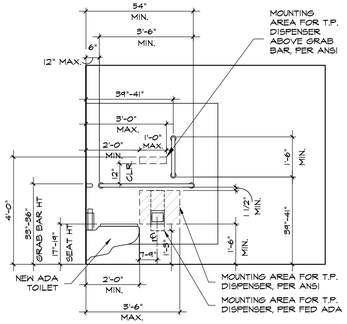


G A1.1 **MENS ADA TOILET**
SCALE: 3/8" = 1'-0" FRONT ELEVATION

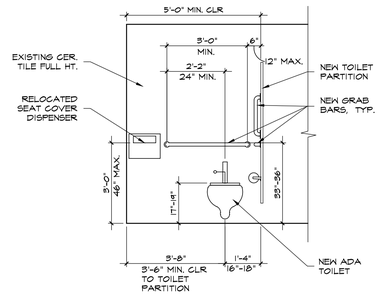


H A1.1 **MENS ADA TOILET**
SCALE: 3/8" = 1'-0" SIDE ELEVATION

9/11/2020

| REVISIONS | | |
|---|---|---|
| | DATE | FOR |
| △ | | |
| △ | | |
| △ | | |
| △ | | |

STATE OF COLORADO
MARK W. TREMMEL
B-1938
LICENSED ARCHITECT


TDG Architecture
201 East Las Animas Street, Suite 113
Colorado Springs, CO 80903
719.623.5641 (Phone)
719.623.5643 (Fax)


EL PASO COUNTY

**EL PASO COUNTY**
**JUDICIAL BUILDING SOUTH**
**SECOND FLOOR**
**RESTROOM REMODEL**
**270 SOUTH TEJON STREET**
**COLORADO SPRINGS, CO 80903**

INTERIOR ELEVATIONS

DATE: 09/10/2020
DRAWN BY: TDG
CHECKED BY: TDG
PROJECT NO: 20110
SHEET NO:
**A1.1**

# GENERAL NOTES

1. CONTRACTOR SHALL VERIFY DIMENSIONS IN FIELD PRIOR TO PROCEEDING WITH ANY WORK.
2. THESE DOCUMENTS HAVE BEEN PRODUCED TO THE BEST OF THE ENGINEER'S ABILITY FROM AVAILABLE EXISTING INFORMATION AND/OR SURVEY OF FIELD CONDITIONS. IT IS THE RESPONSIBILITY OF THE CONTRACTOR TO VERIFY THE EXISTING FIELD CONDITIONS PRIOR TO BID AND PROVIDE A WRITTEN SUBMITTAL TO ENGINEER IDENTIFYING ANY DISCREPANCIES OR VARIANCES FOUND. THE SUBMITTAL MUST ALSO INCLUDE ANY COSTS REQUIRED FOR THE CONTRACTOR'S WORK TO MEET EXISTING CONDITIONS.
3. ALL WORK SHALL BE PERFORMED WITH QUALITY WORKMANSHIP, TO THE APPROVAL AND SATISFACTION OF THE ENGINEER.
4. ALL WORK, MATERIAL AND INSTALLATION SHALL CONFORM TO THE LATEST EDITIONS OF LOCAL, STATE AND NATIONAL CODES AND ORDINANCES.
5. **CONTRACTOR TO VERIFY ANY CHANGES TO THIS SCOPE OF WORK WITH ENGINEER PRIOR TO ROUGH-IN OR INSTALLATION.**

## POST CONSTRUCTION PHASE GENERAL NOTES

CONTRACTOR SHALL PROVIDE RECORD DRAWINGS TO ENGINEER. DRAWINGS SHALL INCLUDE ALL ADDENDUM ITEMS, ACCEPTED REQUESTS FOR INFORMATION (RFI'S), CHANGE ORDERS, ALTERATIONS, REROUTING, FIELD SKETCHES, MARK-UPS, ETC.

SYSTEMS SHALL BE TESTED FOR PROPER OPERATION. IF TESTS SHOW THAT WORK IS DEFECTIVE, CONTRACTOR SHALL MAKE CORRECTIONS NECESSARY AT NO COST TO OWNER.

CONTRACTOR'S FAILURE TO ORDER OR RELEASE ORDER FOR MATERIALS AND/OR EQUIPMENT WILL NOT BE ACCEPTED AS A REASON TO SUBSTITUTE ALTERNATE MATERIALS OR EQUIPMENT.

SYSTEMS AND THEIR COMPONENTS SHALL BE COMPLETE, OPERABLE AND READY FOR CONTINUOUS OPERATION.

## SCOPE

THE SCOPE OF WORK COVERED HEREIN CONSISTS OF FURNISHING ALL LABOR, MATERIALS, NECESSARY EQUIPMENT, AND SERVICES TO COMPLETE THE DESIGN AND RELATED WORK IN FULL ACCORDANCE WITH THESE DRAWINGS, AS SPECIFIED HEREIN, OR BOTH, AND IS SUBJECT TO THE TERMS AND CONDITIONS OF THE CONTRACT.

## CODES, RULES, PERMITS, AND FEES

THE CONTRACTOR (MECHANICAL, ELECTRICAL AND PLUMBING) IS GENERALLY RESPONSIBLE TO ENSURE ALL WORK, BOTH OLD AND NEW, COMPLIES WITH THE APPLICABLE CODE (SPECIFIED BY THE JURISDICTION IN WHICH THE WORK IS BEING COMPLETED) AS WELL AS ANY APPLICABLE LOCAL CODES, STATE CODES, ADDENDUMS, AND ORDINANCES.

## SHOP DRAWINGS

SHOP DRAWINGS FOR MATERIALS OR PRODUCTS SPECIFIED HEREIN AND/OR INDICATED ON DRAWINGS BY TRADE NAME, MANUFACTURER'S NAME OR CATALOG NUMBER SHALL BE PROVIDED AS SPECIFIED.

SUBSTITUTIONS FOR EQUIPMENT SPECIFIED IN THIS SCOPE OF WORK MUST BE SUBMITTED TO ENGINEER FOR APPROVAL PRIOR TO COMMENCING WORK.

## COOPERATION WITH OTHER TRADES

THE SUBCONTRACTOR SHALL GIVE FULL COOPERATION TO OTHER TRADES AND SHALL FURNISH, IN WRITING, TO THE CONTRACTOR, WITH COPIES TO THE ENGINEER (OR ARCHITECT), ANY INFORMATION NECESSARY TO PERMIT THE WORK OF ALL TRADES TO BE INSTALLED SATISFACTORILY AND WITH THE LEAST POSSIBLE INTERFERENCE OR DELAY. COORDINATE ALL INFORMATION ON EQUIPMENT FURNISHED BY OTHERS BEFORE BEGINNING INSTALLATION.

## CUTTING, PATCHING AND FINISHING

UNLESS NOTED OTHERWISE THE CONTRACTOR SHALL DO ALL CUTTING, DRILLING, ETC. REQUIRED FOR WORK UNDER THIS SECTION OF THE SPECIFICATION, INSIDE THE BUILDING.

## MATERIAL AND WORKMANSHIP

ALL MATERIALS AND APPARATUS REQUIRED FOR THE WORK SHALL BE NEW UNLESS INDICATED OTHERWISE IN THE PLANS.

## RECORD DRAWINGS

THE CONTRACTOR SHALL KEEP ACCURATE RECORDS OF CHANGES OR ALTERATIONS DURING THE ACTUAL CONSTRUCTION PROCESS IF DIFFERENT FROM THE PLANS.

THE CONTRACTOR SHALL PROVIDE THE OWNER WITH A REPRODUCIBLE SET OF PLANS FOR EACH DISCIPLINE OF THE COMPLETE INSTALLATION ALONG WITH FIRE ALARM SYSTEM, AS INSTALLED. THE SCALE ON THESE DRAWINGS SHALL BE NO SMALLER THAN THE SCALE USED ON THE ORIGINAL PLANS.

## TESTING

FINAL TESTS SHALL BE MADE ONLY AFTER THE ENGINEER IS SATISFIED THAT ALL WORK HAS BEEN COMPLETED.

## FINAL ACCEPTANCE

AFTER TESTING, A FINAL INSPECTION SHALL BE MADE BY THE ENGINEER AND OTHER AUTHORIZED PERSONS WITH THE CONTRACTOR.

FINAL ACCEPTANCE OF THE PROJECT SHALL NOT SUPERSEDE THE OWNER'S RIGHT TO REQUIRE REPLACEMENT AND/OR REPAIR ANY DEFECTIVE WORK OR MATERIALS.

# ELECTRICAL GENERAL NOTES

1. ALL ELECTRICAL EQUIPMENT SHALL BE U.L. LISTED. ALL EQUIPMENT SHALL BE INSTALLED PER U.L. REQUIREMENTS.
2. ELECTRICAL CONTRACTOR SHALL BE RESPONSIBLE FOR ALL PERMITS, SPLICES, AND INSPECTIONS.
3. ELECTRICAL CONTRACTOR SHALL SUBMIT ELECTRONIC COPIES OF ALL ELECTRICAL EQUIPMENT AND LIGHT FIXTURES TO ENGINEERING THROUGH THE GENERAL CONTRACTOR FOR APPROVAL PRIOR TO ORDERING.
4. FOR ALL EQUIPMENT IDENTIFIED AS PROVIDED BY OTHERS, THE CONTRACTOR SHALL VERIFY EXACT LOCATION OF EQUIPMENT PRIOR TO ROUGH-IN.
5. ALL WIRE SHALL BE THWN/THHW, 75 DEGREE CELSIUS RATED FOR GENERAL USE UNLESS NOTED OTHERWISE.
6. MINIMUM WIRE SIZE SHALL BE #12 AWG UNLESS NOTED OTHERWISE.
7. ALL WIRE SIZES INDICATED ARE FOR INSTALLATION IN A MAXIMUM OF 30-DEGREE CELSIUS AMBIENT. CONDUCTOR AMPACITY SHALL BE DERATED FOR HIGHER AMBIENT INSTALLATION. CONTRACTOR SHALL COORDINATE WIRE SIZE ADJUSTMENT IN AMBIENT TEMPERATURES HIGHER THAN 30-DEGREE CELSIUS.
8. WIRE TERMINATION PROVISIONS FOR PANEL BOARDS, CIRCUIT BREAKERS, SAFETY SWITCHES AND ALL OTHER ELECTRICAL APPARATUS SHALL BE LISTED SUITABLE FOR AT A MINIMUM 75-DEGREE CELSIUS.
9. PROVIDE MAINTENANCE RECEPTACLES WITHIN 25' OF ALL MECHANICAL, MOTORIZED OR ROOFTOP MOUNTED EQUIPMENT.
10. RECEPTACLES INSTALLED OUTSIDE, ON BUILDING EXTERIOR, ON THE ROOF, WITHIN 6' OF ANY SINK (OR WATER SOURCE CONNECTION), VENDING MACHINES, BATHROOM, AND KITCHEN AREAS SHALL BE GFCI TYPE OR PROTECTED BY GFCI CIRCUIT BREAKERS PER NEC.
11. CONNECTION AND ROUGH-IN REQUIREMENTS TO EQUIPMENT SHALL BE PER MANUFACTURER'S APPROVED WIRING DIAGRAMS, DETAILS AND INSTRUCTIONS. IT SHALL BE THE CONTRACTOR'S RESPONSIBILITY TO PROVIDE MATERIALS AND EQUIPMENT COMPATIBLE WITH VENDOR'S EQUIPMENT SPECIFIED.
12. CONTRACTOR SHALL BE RESPONSIBLE FOR REPLACING EQUIPMENT, WHICH IS DAMAGED DUE TO INCORRECT FIELD WIRING, PROVIDED UNDER THIS SECTION OR FACTORY WIRING IN EQUIPMENT PROVIDED UNDER THIS SCOPE OF WORK.
13. CONTRACTOR SHALL PROVIDE FINAL CONNECTIONS TO ANY EQUIPMENT FURNISHED AND PROVIDED BY OWNER. EXACT LOCATION OF EQUIPMENT SHALL BE VERIFIED PRIOR TO ROUGH-IN.
14. ALL NEW EQUIPMENT SUCH AS SWITCHBOARDS, DISTRIBUTION BOARDS, DISCONNECT SWITCHES, TRANSFORMERS AND PANEL-BOARDS SHALL BE BY THE SAME MANUFACTURER UNLESS APPROVED BY ENGINEERING.
15. COORDINATE WITH MECHANICAL DRAWINGS FOR LOCATIONS OF MECHANICAL EQUIPMENT. SHOULD MECHANICAL EQUIPMENT LOCATIONS DIFFER FROM THOSE SHOWN ON ELECTRICAL DRAWINGS, MECHANICAL DRAWINGS SHALL GOVERN. ENGINEER SHALL BE NOTIFIED OF ANY NECESSARY ADJUSTMENTS THEREIN.
16. PROVIDE FUSES OR HACR TYPE CIRCUIT BREAKERS FOR ALL AIR CONDITIONING EQUIPMENT. FUSES AND BREAKERS FOR AIR CONDITIONING EQUIPMENT SHALL BE SIZED IN ACCORDANCE WITH MANUFACTURERS NAMEPLATE. CONTRACTOR SHALL IDENTIFY AND CONTACT ENGINEERING UPON ANY DISCREPANCIES.
17. ALL MECHANICAL EQUIPMENT SHALL BE FURNISHED WITH FUSIBLE DISCONNECTS. THE DISCONNECTS SHALL USE CLASS “R” TYPE FUSES UNLESS NOTED OTHERWISE.
18. FOR ALL MULTI-WIRED BRANCH CIRCUITS, HANDLE TIES SHALL BE PROVIDED. HANDLE TIES SHALL BE REQUIRED IF INDIVIDUAL NEUTRAL CONDUCTORS ARE PROVIDED PER NEC 210.4(B).
19. SHARED NEUTRALS AND TIE-HANDLES FOR BREAKERS SHALL NOT BE ALLOWED UNLESS APPROVED BY ENGINEERING.
20. ALL PANEL DIRECTORIES SHALL BE PROTECTED AND INSTALLED UNDER CLEAR PLASTIC COVERS.
21. ALL POWER TYPE ELECTRICAL EQUIPMENT (I.E. PANEL-BOARDS, SWITCHES, SWITCHBOARDS, ETC.) SHALL BE PROVIDED WITH ENGRAVED NAMEPLATES INDICATING EQUIPMENT DESIGNATION, EQUIPMENT SERVED, SIZE, AND VOLTAGE. NAMEPLATES SHALL BE FASTENED PERMANENTLY WITH ADHESIVE OR MECHANICAL CONNECTION.
22. ALL WIRING SHALL BE INSTALLED IN LISTED METALLIC RACEWAYS UNLESS NOTED OTHERWISE.
23. CONDUIT SHALL BE A MINIMUM OF ¾” UNLESS APPROVED BY ENGINEERING.
24. ALL CIRCUITS SHALL HAVE A CODE SIZED COPPER GROUNDING CONDUCTOR. THE CONDUIT SIZE SHALL BE INCREASED AS REQUIRED.
25. PIPES PASSING THROUGH 1 HOUR FIRE RATED WALLS AND FLOORS SHALL BE SEALED WITH U.L. LISTED MATERIAL 2M FIRE BARRIER, CAULK OR PUTTY OR ENGINEERING APPROVED EQUAL.
26. ALL SPLICES OR CONNECTIONS SHALL BE MADE IN OUTLET BOXES, JUNCTION BOXES OR EQUIPMENT, WHERE ACCESSIBLE.

## PANEL BOARDS

PANELS SHALL BE OF SIZES, RATINGS, AND REQUIREMENTS SHOWN ON THE PLANS. PANELS SHALL BE OF DEAD FRONT CONSTRUCTION.

ALL BUSSING SHALL BE AS SPECIFIED ON PANEL SCHEDULES.

MULTI-POLE BREAKERS SHALL HAVE A SINGLE HANDLE TO TRIP ALL UNGROUNDED CONDUCTORS SIMULTANEOUSLY.

PANEL-BOARD CIRCUIT DIRECTORY SHALL BE UPDATED WITH CURRENT WORK SHOWN IN FINAL REVISIONS OF DRAWINGS.

## LIGHTING

ALL LIGHTING SHALL BE LISTED BY A RECOGNIZED TESTING LAB (I.E. UL, ETC.)

LUMINAIRES IN CONTACT WITH INSULATION SHALL BE U.L. LISTED FOR THERMAL BARRIER OR PROVIDED WITH 3-INCH MINIMUM CLEARANCE.

CONTRACTOR TO ENSURE THAT ALL LIGHTING EXPOSED TO THE PLENUM IS PLENUM RATED.

## GROUNDING

PROVIDE A COMPLETE GROUNDING NETWORK FOR THE ENTIRE ELECTRICAL SYSTEM TO COMPLY WITH NEC REQUIREMENTS.

ALL CONDUITS SHALL HAVE A GROUND WIRE INSTALLED.

A CONDUIT GROUND SHALL NOT BE USED, UNLESS APPROVED BY ENGINEER.

BOND SERVICE ENTRANCE GROUND TO BUILDING STEEL, METAL WATER MAINS, MODE ELECTRODES, ETC.

## DISCONNECT SWITCHES

EQUIPMENT DISCONNECT SWITCHES SHALL BE GENERAL DUTY, OR HEAVY DUTY OF THE TYPE AND RATING SHOWN ON THE PLANS. FUSES SHALL BE PROVIDED OF THE APPROPRIATE TYPE AND RATING FOR THE EQUIPMENT TO BE SERVED.

## EQUIPMENT PROVIDED BY OTHERS

E.C. SHALL PROVIDE CONDUIT, WIRE AND DISCONNECT SWITCHES INDICATED ON DRAWINGS, TO CONNECT ELECTRICAL EQUIPMENT SUPPLIED BY OTHERS, WHICH SHALL INCLUDE BOTH NEW, AND RELOCATION OF EXISTING EQUIPMENT. ALL FINAL ELECTRICAL CONNECTIONS ARE TO BE BY ELECTRICAL CONTRACTOR.

## CONDUCTORS

CONDUCTORS - ALL CONDUCTORS SHALL BE RATED 600V, COPPER, TYPE THWN/THHW OR APPROVED BY ENGINEER. CONDUCTORS OF #8 AWG AND LARGER SHALL BE STRANDED.

CONDUCTORS SHALL BE PULLED WITHOUT THE USE OF OIL OR GREASE. WIRE PULLING LUBRICANTS WHICH ARE APPROVED FOR USE WITH CONDUCTOR INSULATION MAY BE USED. CARE SHALL BE TAKEN IN PULLING WIRE TO ASSURE THAT MAXIMUM ALLOWABLE PULLING TENSION OF WIRE IS NOT EXCEEDED. WIRING WITH DAMAGED CONDUCTORS OR INSULATION WILL NOT BE ACCEPTED.

## CONDUIT

CONDUIT SHALL BE EMT, GRC, PVC (SCH 40 OR SCH 80), LIQUID TIGHT METAL FLEXIBLE, OR METAL FLEXIBLE OR APPROVED BY THE ENGINEER.

FLEX SHALL BE USED FOR CONNECTION TO ALL FIXED EQUIPMENT, EXCEPT IN DAMP OR WET LOCATIONS, WHERE LIQUID TIGHT METAL FLEXIBLE SHALL BE USED.

INSULATING BUSHINGS WITH DOUBLE LOCK-NUTS SHALL BE USED FOR ENTRANCES OF 1-1/4” OR LARGER INTO ENCLOSURES.

SIZES INDICATED ARE MINIMUMS; LARGER SIZES MAY BE USED TO FACILITATE WIRE PULLING, ETC.

## ICC/ANSI A117.1-2003

MOUNTING HEIGHT OF ALL EXISTING AND NEW ELECTRICAL RECEPTACLES, SWITCHES AND CONTROLS SHALL COMPLY WITH ICC/ANSI A117.1-2003.

### PER SECTION 308.2 FORWARD REACH

UNOBSTRUCTED - MINIMUM OF 15 INCHES AND A MAXIMUM OF 48 INCH ABOVE FINISHED FLOOR.

OBSTRUCTED - WHERE OBSTRUCTION IS 20 INCHES MAX A MAXIMUM OF 48 INCHES ABOVE FINISHED FLOOR. WHERE OBSTRUCTION EXCEEDS 20 INCHES A MAXIMUM OF 44 INCHES ABOVE FINISHED FLOOR.

### PER SECTION 308.3 SIDE REACH

UNOBSTRUCTED - MINIMUM OF 15 INCHES AND A MAXIMUM OF 48 INCHES ABOVE FINISHED FLOOR.

# CODES

WHERE APPLICABLE, THE GUIDANCE SET FORTH IN THE 2015 IECC CODE SHALL GOVERN THE SCOPE OF WORK UNDER THIS CONTRACT. THE CODE SECTIONS RELATING TO THE ELECTRICAL SCOPE OF WORK INCLUDE, BUT ARE NOT LIMITED TO:

SECTION 303 - MATERIALS, SYSTEMS AND EQUIPMENT
- SECTION 303.3 - MAINTENANCE INFORMATION

SECTION 402 - BUILDING ENVELOPE REQUIREMENTS
- SECTION 402.1 - GENERAL (PRESCRIPTIVE)
- SECTION 402.4 - FENESTRATION
- SECTION 402.5 - AIR LEAKAGE - THERMAL ENVELOPE

SECTION 405 - ELECTRICAL POWER AND LIGHTING SYSTEMS
- SECTION 405.2 - LIGHTING CONTROLS
- SECTION 405.3 - EXIST SIGNS
- SECTION 405.4 - INTERIOR LIGHTING POWER REQUIREMENTS
- SECTION 405.5 - EXTERIOR LIGHTING
- SECTION 405.6 - ELECTRICAL ENERGY CONSUMPTION
- SECTION 405.7 - ELECTRICAL TRANSFORMERS
- SECTION 405.8 - ELECTRICAL MOTORS

SECTION 406 - ADDITIONAL EFFICIENCY PACKAGE OPTIONS
- SECTION 406.1 - REQUIREMENTS
- SECTION 406.3 - REDUCED LIGHTING POWER DENSITY
- SECTION 406.4 - ENHANCED DIGITAL LIGHTING CONTROLS
- SECTION 406.5 - ON-SITE RENEWABLE ENERGY

SECTION 407 - TOTAL BUILDING PERFORMANCE

SECTION 408 - SYSTEM COMMISSIONING
- SECTION 408.1 - GENERAL
- SECTION 408.3 - LIGHTING SYSTEM FUNCTIONAL TESTING

SECTION 501 - GENERAL

SECTION 502 - ADDITIONS

SECTION 503 - ALTERATIONS
- SECTION 503.1 - GENERAL
- SECTION 503.6 - LIGHTING SYSTEMS

SECTION 504 - REPAIRS
- SECTION 504.1 - GENERAL
- SECTION 504.2 - APPLICATION

SECTION 505 - CHANGE OF OCCUPANCY OR USE

# LEGEND AND SYMBOLS

## LIGHTING

(FLUSH MOUNT) (SURFACE MOUNT)

- 2'x4' TROFFER
- 2'x2' TROFFER
- 1'x4' TROFFER
- X CAN FIXTURE
- SCONCE FIXTURE
- WALL MOUNTED FIXTURE
- TRACK LIGHTING
- OS OCCUPANCY SENSOR
- PC PHOTOCELL SWITCH
- EXIT SIGN (WITH BATTERY BACKUP - 1 HR)
- FROGEYE EMERGENCY FIXTURE (WITH BATTERY BACKUP - 1 HR)
- CIRCUIT HOME-RUN
- INDICATES MULTIPLE CIRCUITS IN ONE CONDUIT
- $* SWITCH, * = *4: FOUR-WAY, 3: THREE-WAY, OS: OCCUPANCY SENSOR, VS: VACANCY SENSOR, D: DIMMER*

## POWER

- RECEPTACLE, * = *G: GFCI, W: WEATHER-PROOF, AC: ABOVE COUNTER, IG: ISOLATED GROUND*
- RECEPTACLE, QUAD
- RECEPTACLE, TAMPER-PROOF
- RECEPTACLE, SPECIAL
- RECEPTACLE, HALF-SWITCH
- RECEPTACLE, * = *C: CEILING, F: FLOOR*
- RECEPTACLE, SPECIAL
- JB JUNCTION BOX, TYPICAL
- JB JUNCTION BOX, SPECIAL
- CIRCUIT HOME-RUN
- INDICATES MULTIPLE CIRCUITS IN ONE CONDUIT
- PANEL, NEW
- PANEL, EXISTING
- METER

## FIRE/ALARM

- SD SMOKE DETECTOR
- CD CARBON MONOXIDE DETECTOR
- S/C SMOKE/CARBON MONOXIDE COMBINATION DETECTOR
- FP FIRE PULL LEVER
- F FIRE HORN
- S F FIRE HORN AND SPEAKER

## COMMUNICATIONS

- C CATV OUTLET (ROUGH-IN)
- TELEPHONE OUTLET (ROUGH-IN)
- DATA OUTLET (ROUGH-IN)
- TELEPHONE/DATA COMBINATION OUTLET (ROUGH-IN)

## SINGLE-LINE DIAGRAM

- SOURCE TIE-IN
- M METER
- MOTOR
- WEATHERHEAD
- N G SERVICE ENTRANCE GROUND
- GROUND
- CURRENT TRANSFORMER (CT)
- × SC# SHORT CIRCUIT
- DISCONNECT SWITCH
- FUSE
- BREAKER
- BUS DUCT
- S O.L. STARTER (VENDOR PROVIDED, SPECIFIED)

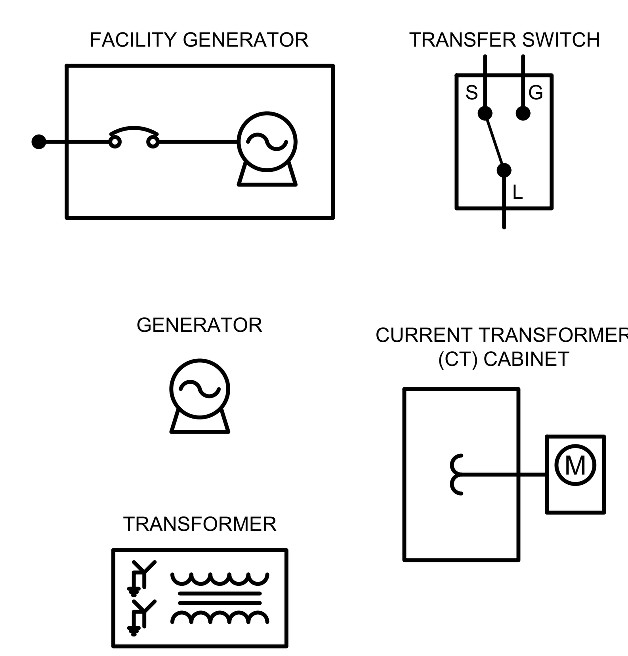


## GENERAL

- # KEY NOTE
- # FEEDER TAG
- # GENERAL EQUIPMENT TAG
- XXX # M/E/P EQUIPMENT TAG
- POINT OF CONNECTION
- NOT IN CONTRACT
- DEMOLITION

## ABBREVIATIONS

### GENERAL

| | |
|---|---|
| AC | ABOVE COUNTER |
| AFF | ABOVE FINISHED FLOOR |
| AG | ABOVE GRADE |
| DN | DOWN |
| EC | ELECTRICAL CONTRACTOR |
| GC | GENERAL CONTRACTOR |
| MC | MECHANICAL CONTRACTOR |
| MEP | MECHANICAL, ELECTRICAL, PLUMBING |
| MFR | MANUFACTURER |
| NIC | NOT IN CONTRACT |
| NTS | NOT TO SCALE |
| POC | POINT OF CONNECTION |
| QTY | QUANTITY |
| TCC | TEMPERATURE CONTROL CONTRACTOR |
| W/ | WITH |
| W/O | WITHOUT |
| WO | WALL OPENING (ABOVE CEILING) |

### SCOPE

| | |
|---|---|
| (E) | EXISTING |
| (N) | NEW |
| (R) | RELOCATED |
| (V) | VENDOR |

### ELECTRICAL

| | |
|---|---|
| FLA | FULL LOAD AMPS |
| GFCI | GROUND FAULT CIRCUIT INTERRUPTER |
| MCA | MINIMUM CURRENT AMPACITY |
| MOCP | MAXIMUM OVER-CURRENT PROTECTION |
| OS | OCCUPANCY SENSOR |
| TTB | TELEPHONE TERMINATION BLOCK |
| W | WEATHERPROOF |

# SHEET NOMENCLATURE

X - X - # # # . X

**LEVEL 1 DESIGNATION**
- M MECHANICAL
- E ELECTRICAL
- P PLUMBING
- MD MECH. DEMOLITION
- ED ELEC. DEMOLITION
- PD PLUM. DEMOLITION

**LEVEL 2 DESIGNATION ***
* MAY NOT APPLY FOR COMBINED SHEETS
- H HVAC
- G GAS
- D PROCESS
- P POWER
- L LIGHTING
- W WATER
- S SANITARY (WASTE)

**SHEET TYPE DESIGNATION**
- 0 GENERAL
- 1 PLANS
- 2 ELEVATIONS
- 3 SECTIONS
- 4 LARGE SCALE PLANS
- 5 DETAILS
- 6 SCHEDULES & CALCULATIONS
- 7 DIAGRAMS
- 8 < NOT USED >
- 9 ISOMETRICS

**SHEET NUMBER**
01 - 99

**SUPPLEMENTAL**
- 1 - 9 FLOORS
- B BASEMENT
- M MEZZANINE
- R ROOF

BID/RBD SET

| REVISIONS | | |
|---|---|---|
| | DATE | FOR |
| △ | | |
| △ | | |
| △ | | |
| △ | | |

COLORADO LICENSED PROFESSIONAL ENGINEER AARON ... SPRINGFIELD 0051275 09-10-2020 Exp 10/31/2[illegible]


51EC INC.
31 NORTH TEJON ST, SUITE 304
COLORADO SPRINGS, CO 80903
FIFTYONEEC.COM
T 719.368.7394

TDG Architecture
201 East Las Animas Street, Suite 113
Colorado Springs, CO 80903
719.623.5641 (Phone)
719.623.5643 (Fax)


EL PASO COUNTY

EL PASO COUNTY
JUDICIAL BUILDING SOUTH
RESTROOM REMODEL – LEVEL 2
270 SOUTH TEJON STREET
COLORADO SPRINGS, CO 80903

LEGEND, NOTES AND SPECIFICATIONS

DATE: 09/10/2020
DRAWN BY: JWB/JLV
CHECKED BY: AIS
PROJECT NO: 5136-20-05C
SHEET NO: E-001

PLOT DATE: 09/10/20 10:16 AM BY: JERIKA VALERIO PROJ. FILE: P:\Tremmel Design Group\Judicial Court House, South Tower, Restrooms Remodel\Electrical\Judicial Court House, South Tower, Restrooms Remodel – L2 – Electrical.dwg

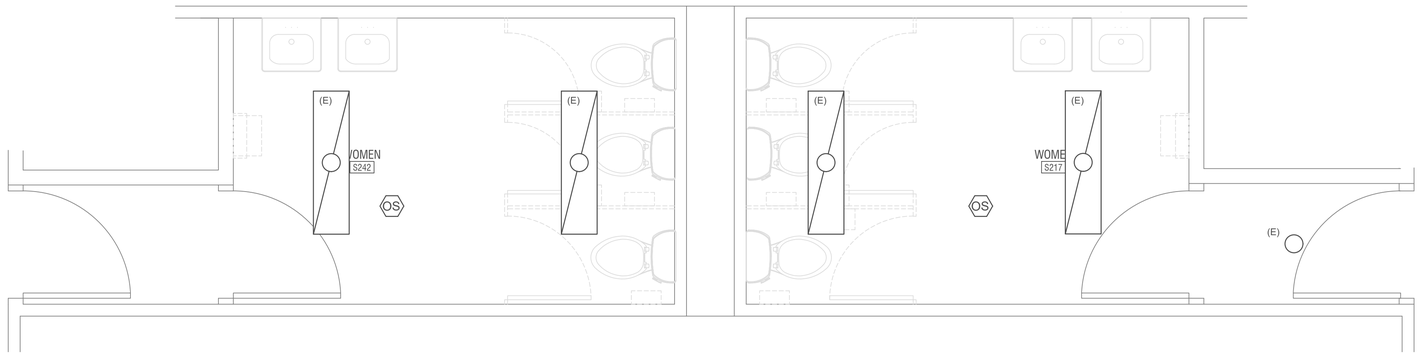


LEVEL 2 "S242" AND "S217" LIGHTING DEMOLITION PLAN
SCALE: 1/2" = 1'-0"

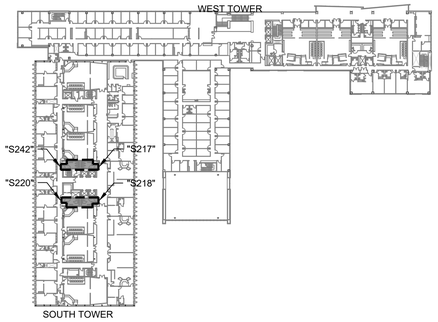


KEY MAP

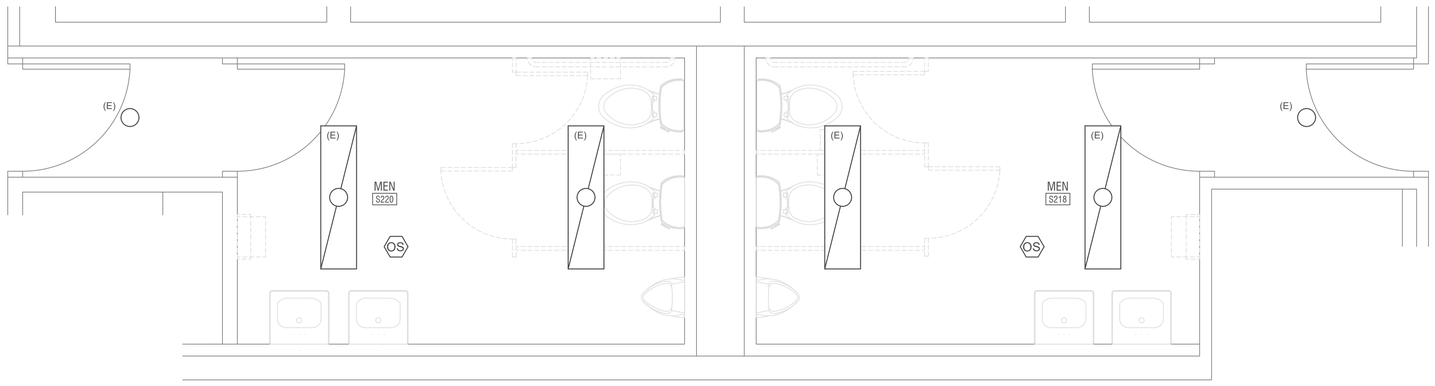


LEVEL 2 "S220" AND "S218" LIGHTING DEMOLITION PLAN
SCALE: 1/2" = 1'-0"

GENERAL NOTES:

EXISTING CONDITIONS HAVE BEEN COMPLETED TO THE BEST OF THE ENGINEER'S ABILITY. SHOULD EXISTING CONDITIONS DIFFER FROM LAYOUT SHOWN, CONTRACTOR SHALL NOTIFY AND COORDINATE WITH ENGINEER TO ADDRESS ANY DISCREPANCIES.

SHEET SHOWN FOR REFERENCE PURPOSES ONLY. THERE IS NO DEMOLITION WORK FOR EXISTING LIGHTING.

BID/RBD SET

REVISIONS

| | DATE | FOR |
|---|---|---|
| △ | | |
| △ | | |
| △ | | |
| △ | | |

COLORADO LICENSED PROFESSIONAL ENGINEER 0051275 09-10-2020 EXP 10/31/21


51EC INC.
31 NORTH TEJON ST, SUITE 304
COLORADO SPRINGS, CO 80903
FIFTYONEEC.COM
T 719.368.7394

TDG Architecture
201 East Las Animas Street, Suite 113
Colorado Springs, CO 80903
719.623.5641 (Phone)
719.623.5643 (Fax)


EL PASO COUNTY

EL PASO COUNTY
JUDICIAL BUILDING SOUTH
RESTROOM REMODEL – LEVEL 2
270 SOUTH TEJON STREET
COLORADO SPRINGS, CO 80903

LEVEL 2
LIGHTING
DEMOLITION PLAN

DATE: 09/10/2020
DRAWN BY: JWB/JLV
CHECKED BY: AIS
PROJECT NO: 5136-20-05C
SHEET NO:
ED-L-103

PLOT DATE: 09/10/20 10:16 AM BY: JERIKA VALERIO PROJ. FILE: P:\Tremmel Design Group\Judicial Court House, South Tower, Restrooms Remodel\Electrical\Judicial Court House, South Tower, Restrooms Remodel – L2 – Electrical.dwg

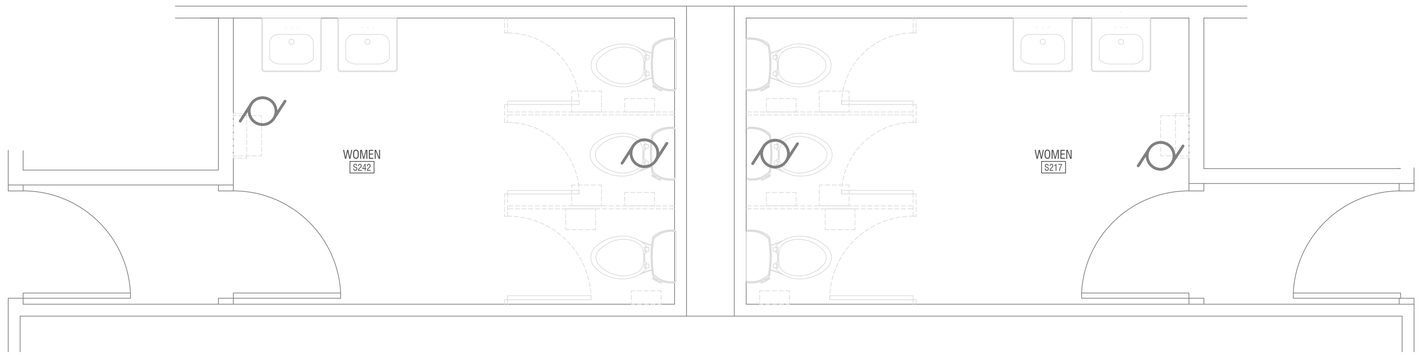


LEVEL 2 "S242" AND "S217" POWER DEMOLITION PLAN

SCALE: 1/2" = 1'-0"

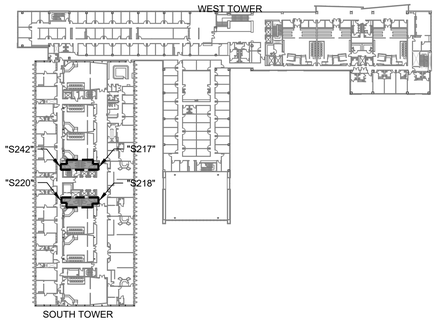


KEY MAP

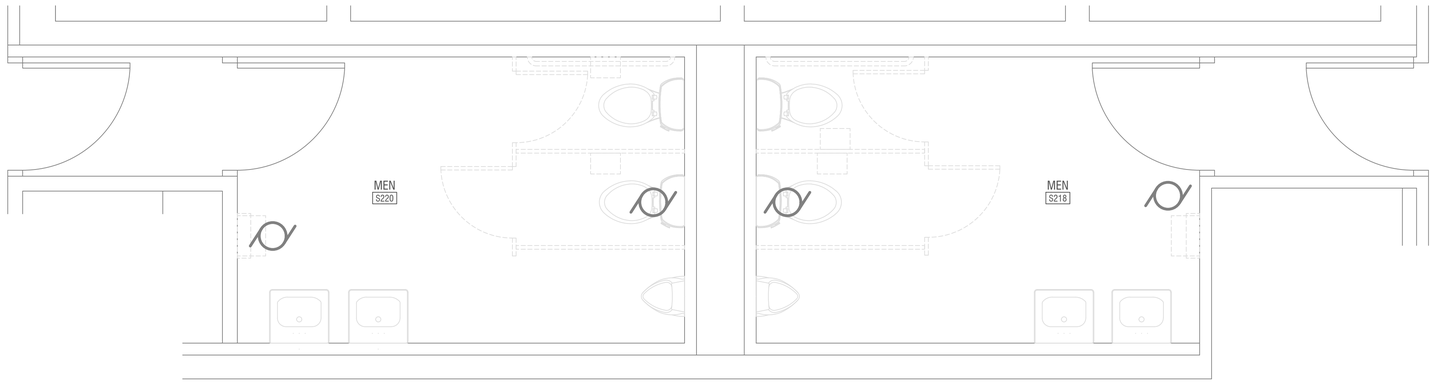


LEVEL 2 "S220" AND "S218" POWER DEMOLITION PLAN

SCALE: 1/2" = 1'-0"

## GENERAL NOTES:

EXISTING CONDITIONS HAVE BEEN COMPLETED TO THE BEST OF THE ENGINEER'S ABILITY. SHOULD EXISTING CONDITIONS DIFFER FROM LAYOUT SHOWN, CONTRACTOR SHALL NOTIFY AND COORDINATE WITH ENGINEER TO ADDRESS ANY DISCREPANCIES.

SHEET SHOWN FOR REFERENCE PURPOSES ONLY. THERE IS NO DEMOLITION WORK FOR EXISTING POWER.

BID/RBD SET

PLOT DATE: 09/10/20 10:16 AM BY: JERIKA VALERIO PROJ. FILE: P:\Vrenmel Design Group\Judicial Court House, South Tower, Restrooms Remodel\Electrical\Judicial Court House, South Tower, Restrooms Remodel - L2 - Electrical.dwg

| REVISIONS | | |
|---|---|---|
| | DATE | FOR |
| 1 | | |
| 2 | | |
| 3 | | |
| 4 | | |

COLORADO LICENSED
ALISON SCHMITT
051275
09-10-2020
PROFESSIONAL ENGINEER

Exp 10/4/22


51EC INC.
31 NORTH TEJON ST, SUITE 304
COLORADO SPRINGS, CO 80903
FIFTYONEEC.COM
T 719.368.7394

TDG Architecture
201 East Las Animas Street, Suite 113
Colorado Springs, CO 80903
719.623.5641 (Phone)
719.623.5643 (Fax)


EL PASO COUNTY

EL PASO COUNTY
JUDICIAL BUILDING SOUTH
RESTROOM REMODEL – LEVEL 2
270 SOUTH TEJON STREET
COLORADO SPRINGS, CO 80903

LEVEL 2
POWER
DEMOLITION PLAN

| | |
|---|---|
| DATE: | 09/10/2020 |
| DRAWN BY: | JWB/JLV |
| CHECKED BY: | AIS |
| PROJECT NO: | 5136-20-05C |
| SHEET NO: | ED-P-103 |

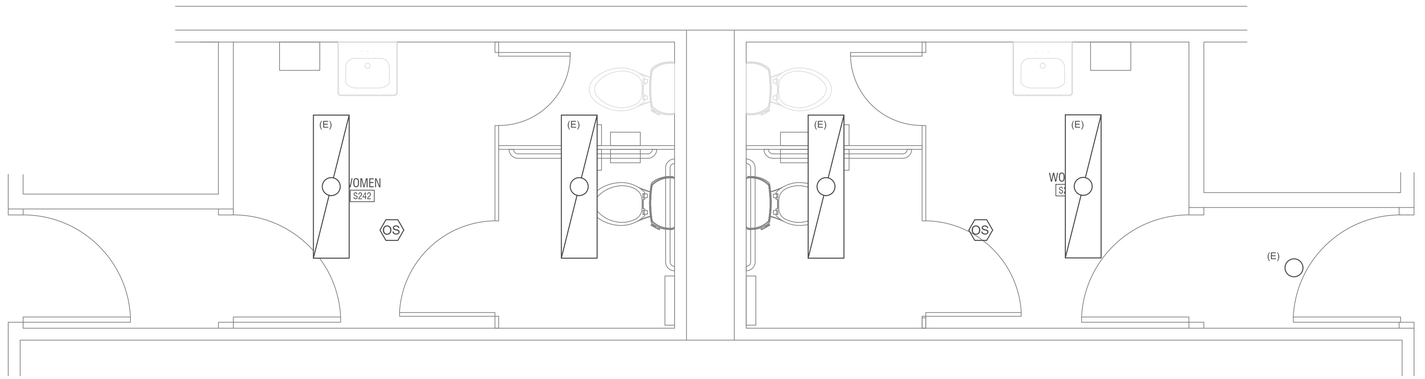


LEVEL 2 "S242" AND "S217" LIGHTING NEW WORK PLAN

SCALE: 1/2" = 1'-0"

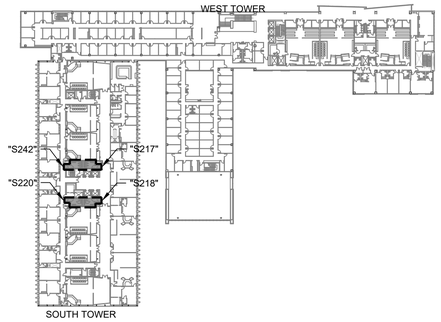


KEY MAP

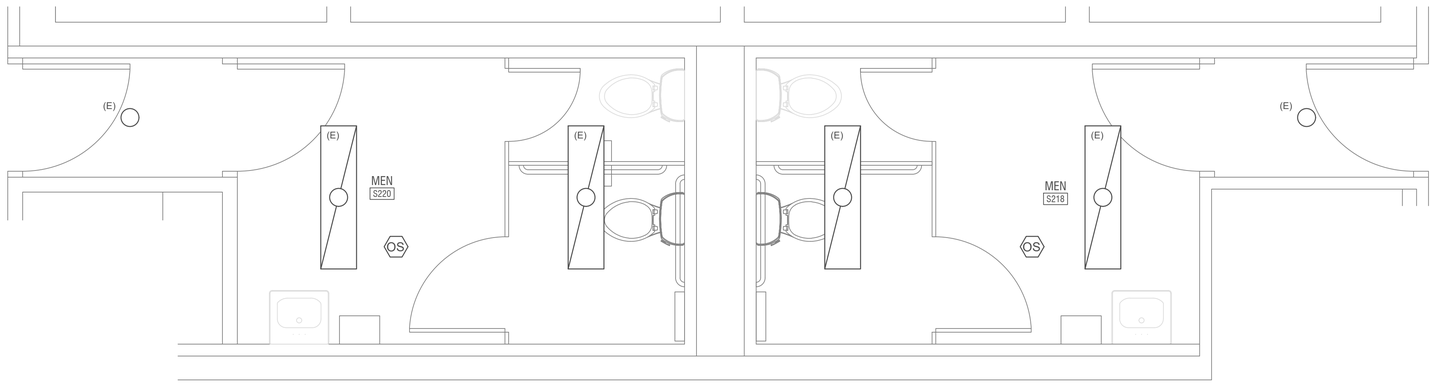


LEVEL 2 "S220" AND "S218" LIGHTING NEW WORK PLAN

SCALE: 1/2" = 1'-0"

## GENERAL NOTES:

ALL EMERGENCY EGRESS LIGHTING (INCLUDING WALL PACKS AND EXIT SIGNS) SHALL BE CONNECTED TO THE NEAREST NON-SWITCHED LIGHTING CIRCUIT AND SHALL OPERATE ON INTERNAL BATTERY BACKUP UPON NORMAL POWER LOSS.

PROVIDE DOCUMENTATION SHOWING THE INSTALLED LIGHTING CONTROLS MEET PERFORMANCE CRITERIA OF SECTION C405 OF THE IECC AND SHALL BE PROVIDED TO THE OWNER WITHIN 90 DAYS FROM THE DATE OF RECEIVING THE CERTIFICATE OF OCCUPANCY.

THE SCOPE OF THIS WORK MODIFIES LESS THAN 50% OF THE LIGHTING, THEREFORE, IECC CALCULATION IS NOT REQUIRED.

SHEET SHOWN FOR REFERENCE PURPOSES ONLY. ALL EXISTING LIGHTING SHALL REMAIN.

BID/RBD SET

| REVISIONS | | |
|---|---|---|
| | DATE | FOR |
| 1 | | |
| 2 | | |
| 3 | | |
| 4 | | |

COLORADO LICENSED
JEFFREY S. WHITE
0051275
09-10-2020
PROFESSIONAL ENGINEER

Exp 10/4/20


51EC INC.
31 NORTH TEJON ST, SUITE 304
COLORADO SPRINGS, CO 80903
FIFTYONEEC.COM
T 719.368.7394

TDG Architecture
201 East Las Animas Street, Suite 113
Colorado Springs, CO 80903
719.623.5641 (Phone)
719.623.5643 (Fax)


EL PASO COUNTY

EL PASO COUNTY
JUDICIAL BUILDING SOUTH
RESTROOM REMODEL – LEVEL 2
270 SOUTH TEJON STREET
COLORADO SPRINGS, CO 80903

LEVEL 2
LIGHTING
NEW WORK PLAN

| | |
|---|---|
| DATE: | 09/10/2020 |
| DRAWN BY: | JWB/JLV |
| CHECKED BY: | AIS |
| PROJECT NO: | 5136-20-05C |
| SHEET NO: | E-L-103 |


PLOT DATE: 09/10/20 10:16 AM BY: JERIKA VALERIO PROJ. FILE: P:\Vremmel Design Group\Judicial Court House, South Tower, Restrooms Remodel\Electrical\Judicial Court House, South Tower, Restrooms Remodel – L2 – Electrical.dwg

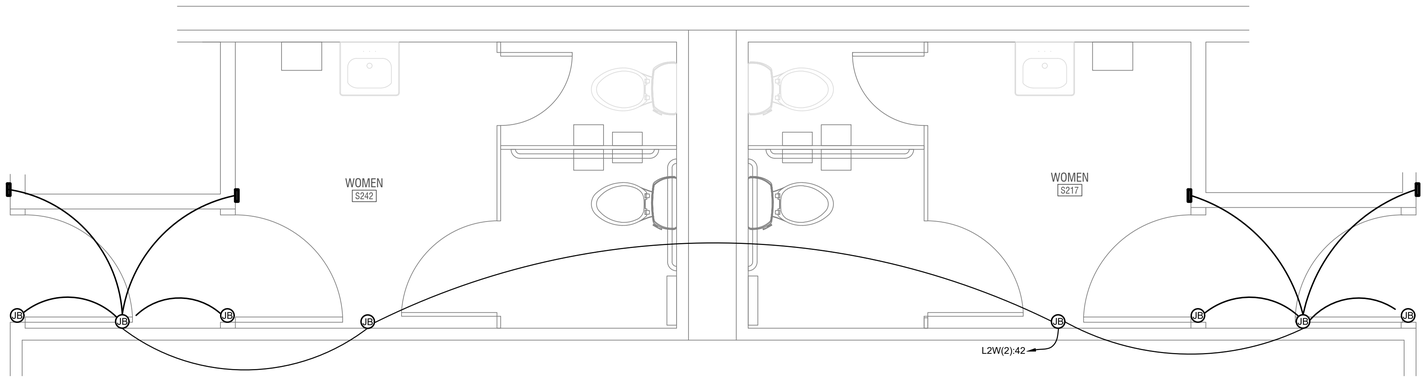


LEVEL 2 "S242" AND "S217" POWER NEW WORK PLAN
SCALE: 1/2" = 1'-0"

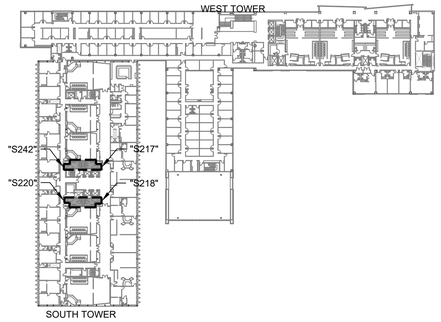


KEY MAP

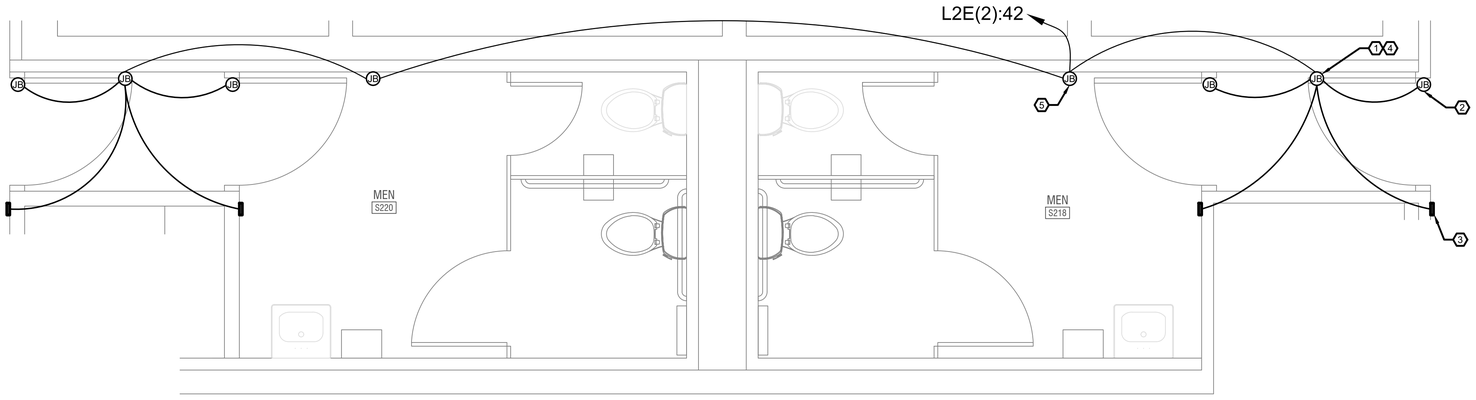


LEVEL 2 "S220" AND "S218" POWER NEW WORK PLAN
SCALE: 1/2" = 1'-0"

## GENERAL NOTES:

ELECTRICAL CONTRACTOR SHALL COORDINATE EXACT LOCATIONS, CONNECTION TYPES, AND WIRING REQUIREMENTS OF ALL OWNER PROVIDED EQUIPMENT PRIOR TO ROUGH-IN. CONTRACTOR TO NOTIFY ENGINEER ON ANY DIFFERENCES UPON EQUIPMENT DELIVERY THAT DIFFER FROM THESE PLANS.

ALL PIPING PENETRATIONS THROUGH RATED ASSEMBLIES ARE TO BE SEALED AND PROTECTED BY FIRE RESISTANT CAULKING.

ALL AUTOMATIC FLUSH VALVES ARE BATTERY OPERATED. SEE PLUMBING SPECIFICATIONS FOR ADDITIONAL INFORMATION.

NOTES ARE TYPICAL FOR BOTH RESTROOMS.

SEE SHEET E-602 FOR LOAD SUMMARY AT PANEL(S).

## NEW WORK KEY NOTES:

1. MOUNT ADA AUTOMATIC DOOR CONTROLLER ABOVE CEILING. CONTRACTOR TO WIRE PER MANUFACTURERS INSTRUCTIONS AND RECOMMENDATIONS. (TYPICAL OF 2)
2. ADA AUTOMATIC DOOR MOTOR AND HINGE TO BE INSTALLED ON DOOR. WIRE PER MANUFACTURERS INSTRUCTIONS AND RECOMMENDATIONS. (TYPICAL OF 4)
3. ADA PUSH BUTTON TO BE MOUNTED AT A MINIMUM OF 42" A.F.F. WIRE PER MANUFACTURERS INSTRUCTIONS AND RECOMMENDATIONS. (TYPICAL OF 4)
4. SEE SHEET E-602 FOR ADA AUTOMATIC DOOR CONTROLLER DETAIL FOR ADDITIONA INFORMATION.
5. PROVIDE JUNCTION BOX FOR NEW HOME RUN TO PANEL INDICATED. (TYPICAL OF 2)

BID/RBD SET

| REVISIONS | | |
|---|---|---|
| | DATE | FOR |
| 1 | | |
| 2 | | |
| 3 | | |
| 4 | | |

COLORADO LICENSED
JEFFREY S. WELLS
0051275
09-10-2020
PROFESSIONAL ENGINEER

51EC INC.
31 NORTH TEJON ST, SUITE 304
COLORADO SPRINGS, CO 80903
FIFTYONEEC.COM
T 719.368.7394

TDG Architecture
201 East Las Animas Street, Suite 113
Colorado Springs, CO 80903
719.623.5641 (Phone)
719.623.5643 (Fax)

EL PASO COUNTY

EL PASO COUNTY
JUDICIAL BUILDING SOUTH
RESTROOM REMODEL – LEVEL 2
270 SOUTH TEJON STREET
COLORADO SPRINGS, CO 80903

LEVEL 1
POWER
NEW WORK PLAN

| | |
|---|---|
| DATE: | 09/10/2020 |
| DRAWN BY: | JWB/JLV |
| CHECKED BY: | AIS |
| PROJECT NO: | 5136-20-05C |
| SHEET NO: | E-P-103 |

PLOT DATE: 09/10/20 10:16 AM BY: JENNA VALERIO PROJ. FILE: P:\Vermeil Design Group\Judicial Court House, South Tower, Restrooms Remodel\Electrical\Judicial Court House, South Tower, Restrooms Remodel – L2 – Electrical.dwg

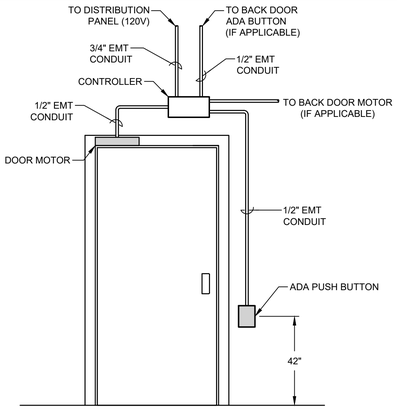


## ADA PUSH BUTTON DOOR ASSEMBLY

SCALE: NTS

## LOAD SUMMARY

| ADDED LOAD | CONNECTED LOAD |
|---|---|
| DOOR CLOSERS (QTY 2) | 720VA (6A @ 120V, 3-PHASE) |

PANEL L2E AND L2W ARE RATED AT 200A, 3-PHASE. PER RBD REQUIREMENTS 5% (10A) CHANGE IS PERMITTED. 6A ADDED TO EACH PANEL.

BID/RBD SET

| REVISIONS | | |
|---|---|---|
| | DATE | FOR |
| △ | | |
| △ | | |
| △ | | |
| △ | | |

COLORADO LICENSED PROFESSIONAL ENGINEER 0051275 09-10-2020 EXP 10/31/2

51EC INC.
31 NORTH TEJON ST, SUITE 304
COLORADO SPRINGS, CO 80903
FIFTYONEEC.COM
T 719.368.7394

TDG Architecture
201 East Las Animas Street, Suite 113
Colorado Springs, CO 80903
719.623.5641 (Phone)
719.623.5643 (Fax)

EL PASO COUNTY

EL PASO COUNTY
JUDICIAL BUILDING SOUTH
RESTROOM REMODEL – LEVEL 2
270 SOUTH TEJON STREET
COLORADO SPRINGS, CO 80903

PANEL SCHEDULES AND CALCULATIONS

DATE: 09/10/2020
DRAWN BY: JWB/JLV
CHECKED BY: AIS
PROJECT NO: 5136-20-05C
SHEET NO:
E-602

PLOT DATE: 09/10/20 10:16 AM BY: JERIKA VALERIO PROJ. FILE: P:\Tremmel Design Group\Judicial Court House, South Tower, Restrooms Remodel\Electrical\Judicial Court House, South Tower, Restrooms Remodel – L2 – Electrical.dwg

# GENERAL NOTES

1. CONTRACTOR SHALL VERIFY DIMENSIONS IN FIELD PRIOR TO PROCEEDING WITH ANY WORK.
2. THESE DOCUMENTS HAVE BEEN PRODUCED TO THE BEST OF THE ENGINEER'S ABILITY FROM AVAILABLE EXISTING INFORMATION AND/OR SURVEY OF FIELD CONDITIONS. IT IS THE RESPONSIBILITY OF THE CONTRACTOR TO VERIFY THE EXISTING FIELD CONDITIONS PRIOR TO BID AND PROVIDE A WRITTEN SUBMITTAL TO ENGINEER IDENTIFYING ANY DISCREPANCIES OR VARIANCES FOUND. THE SUBMITTAL MUST ALSO INCLUDE ANY COSTS REQUIRED FOR THE CONTRACTOR'S WORK TO MEET EXISTING CONDITIONS.
3. ALL WORK SHALL BE PERFORMED WITH QUALITY WORKMANSHIP, TO THE APPROVAL AND SATISFACTION OF THE ENGINEER.
4. ALL WORK, MATERIAL AND INSTALLATION SHALL CONFORM TO THE LATEST EDITIONS OF LOCAL, STATE AND NATIONAL CODES AND ORDINANCES.
5. **CONTRACTOR TO VERIFY ANY CHANGES TO THIS SCOPE OF WORK WITH ENGINEER PRIOR TO ROUGH-IN OR INSTALLATION.**

## POST CONSTRUCTION PHASE GENERAL NOTES

CONTRACTOR SHALL PROVIDE RECORD DRAWINGS TO ENGINEER. DRAWINGS SHALL INCLUDE ALL ADDENDUM ITEMS, ACCEPTED REQUESTS FOR INFORMATION (RFI'S), CHANGE ORDERS, ALTERATIONS, REROUTING, FIELD SKETCHES, MARK-UPS, ETC.

SYSTEMS SHALL BE TESTED FOR PROPER OPERATION. IF TESTS SHOW THAT WORK IS DEFECTIVE, CONTRACTOR SHALL MAKE CORRECTIONS NECESSARY AT NO COST TO OWNER.

CONTRACTOR'S FAILURE TO ORDER OR RELEASE ORDER FOR MATERIALS AND/OR EQUIPMENT WILL NOT BE ACCEPTED AS A REASON TO SUBSTITUTE ALTERNATE MATERIALS OR EQUIPMENT.

SYSTEMS AND THEIR COMPONENTS SHALL BE COMPLETE, OPERABLE AND READY FOR CONTINUOUS OPERATION.

## SCOPE

THE SCOPE OF WORK COVERED HEREIN CONSISTS OF FURNISHING ALL LABOR, MATERIALS, NECESSARY EQUIPMENT, AND SERVICES TO COMPLETE THE DESIGN AND RELATED WORK IN FULL ACCORDANCE WITH THESE DRAWINGS, AS SPECIFIED HEREIN, OR BOTH, AND IS SUBJECT TO THE TERMS AND CONDITIONS OF THE CONTRACT.

## CODES, RULES, PERMITS, AND FEES

THE CONTRACTOR (MECHANICAL, ELECTRICAL AND PLUMBING) IS GENERALLY RESPONSIBLE TO ENSURE ALL WORK, BOTH OLD AND NEW, COMPLIES WITH THE APPLICABLE CODE (SPECIFIED BY THE JURISDICTION IN WHICH THE WORK IS BEING COMPLETED) AS WELL AS ANY APPLICABLE LOCAL CODES, STATE CODES, ADDENDUMS, AND ORDINANCES.

## SHOP DRAWINGS

SHOP DRAWINGS FOR MATERIALS OR PRODUCTS SPECIFIED HEREIN AND/OR INDICATED ON DRAWINGS BY TRADE NAME, MANUFACTURER'S NAME OR CATALOG NUMBER SHALL BE PROVIDED AS SPECIFIED.

SUBSTITUTIONS FOR EQUIPMENT SPECIFIED IN THIS SCOPE OF WORK MUST BE SUBMITTED TO ENGINEER FOR APPROVAL PRIOR TO COMMENCING WORK.

## COOPERATION WITH OTHER TRADES

THE SUBCONTRACTOR SHALL GIVE FULL COOPERATION TO OTHER TRADES AND SHALL FURNISH, IN WRITING, TO THE CONTRACTOR, WITH COPIES TO THE ENGINEER (OR ARCHITECT), ANY INFORMATION NECESSARY TO PERMIT THE WORK OF ALL TRADES TO BE INSTALLED SATISFACTORILY AND WITH THE LEAST POSSIBLE INTERFERENCE OR DELAY. COORDINATE ALL INFORMATION ON EQUIPMENT FURNISHED BY OTHERS BEFORE BEGINNING INSTALLATION.

## CUTTING, PATCHING AND FINISHING

UNLESS NOTED OTHERWISE THE CONTRACTOR SHALL DO ALL CUTTING, DRILLING, ETC. REQUIRED FOR WORK UNDER THIS SECTION OF THE SPECIFICATION, INSIDE THE BUILDING.

## MATERIAL AND WORKMANSHIP

ALL MATERIALS AND APPARATUS REQUIRED FOR THE WORK SHALL BE NEW UNLESS INDICATED OTHERWISE IN THE PLANS.

## RECORD DRAWINGS

THE CONTRACTOR SHALL KEEP ACCURATE RECORDS OF CHANGES OR ALTERATIONS DURING THE ACTUAL CONSTRUCTION PROCESS IF DIFFERENT FROM THE PLANS.

THE CONTRACTOR SHALL PROVIDE THE OWNER WITH A REPRODUCIBLE SET OF PLANS FOR EACH DISCIPLINE OF THE COMPLETE INSTALLATION ALONG WITH FIRE ALARM SYSTEM, AS INSTALLED. THE SCALE ON THESE DRAWINGS SHALL BE NO SMALLER THAN THE SCALE USED ON THE ORIGINAL PLANS.

## TESTING

FINAL TESTS SHALL BE MADE ONLY AFTER THE ENGINEER IS SATISFIED THAT ALL WORK HAS BEEN COMPLETED.

## FINAL ACCEPTANCE

AFTER TESTING, A FINAL INSPECTION SHALL BE MADE BY THE ENGINEER AND OTHER AUTHORIZED PERSONS WITH THE CONTRACTOR.

FINAL ACCEPTANCE OF THE PROJECT SHALL NOT SUPERSEDE THE OWNER'S RIGHT TO REQUIRE REPLACEMENT AND/OR REPAIR ANY DEFECTIVE WORK OR MATERIALS.

# PLUMBING GENERAL NOTES

1. REFER TO AND COORDINATE WITH ARCHITECTURAL DRAWINGS FOR EXACT PLUMBING FIXTURES, LOCATIONS, AND MOUNTING HEIGHTS.
2. NEW WORK, ALTERATIONS OR ADDITIONS TO PLUMBING SYSTEMS ARE SUBJECT TO FIELD INSPECTION.
3. CONTRACTOR SHALL VERIFY SIZE AND LOCATION OF EXISTING UNDERGROUND UTILITIES UNOBSERVABLE IN FIELD PRIOR TO COMMENCING WORK. CONTRACTOR TO COORDINATE WITH OWNER AND ENGINEER ON ANY DISCREPANCIES BETWEEN FIELD CONDITIONS AND DRAWINGS.
4. ALL PLUMBING FIXTURES IN NEW CONSTRUCTION SHALL MEET THE FLOW AND PRESSURE REQUIREMENTS OF IPC TABLES 604.3 & 604.4.
5. VENTS THROUGH ROOF SHALL BE A MINIMUM 10'-0" FROM OUTSIDE AIR INTAKES. THIS IS TO BE COORDINATED WITH MECHANICAL FOR THIS SCOPE OF WORK.
6. OPEN VENTS SHALL TERMINATE NOT LESS THAN 12 INCHES ABOVE ROOF AND COMPLY TO SIZE AND LOCATION REQUIREMENTS OF IPC 903, DBCA/IPC 903.1, AND IPC 904.
7. VERIFY LOCATION AND ORIENTATION OF ADA COMPLIANT FIXTURES WITH ARCHITECTURAL DRAWINGS.
8. PROVIDE CHROME PLATED ESCUTCHEONS AT PIPE SLEEVES FOR EXPOSED BARE PIPE.
9. PROVIDE 12" X 12" MINIMUM ACCESS DOOR IN INACCESSIBLE CEILINGS AND WALLS FOR EQUIPMENT REQUIRING ACCESS OR ADJUSTMENT. PROVIDE LOCKING ACCESS DOORS IN GYPSUM BOARD CEILINGS AND INACCESSIBLE WALLS FOR VALVES AND CLEAN OUTS.
10. PLUMBING FIXTURES SHALL BE SUBMITTED TO ARCHITECT AND ENGINEER FOR REVIEW AND APPROVAL PRIOR TO ORDERING. CONTRACTOR SHALL SUBMIT PLUMBING FIXTURES TO ARCHITECT, ENGINEER AND OWNER PRIOR TO BID FOR FINAL REVIEW AND ACCEPTANCE.
11. AT ADA COMPLIANT LAVATORIES AND SINKS, COVER OFFSET WASTE, P-TRAP, HOT AND COLD-WATER ANGLE STOPS AND SUPPLIES WITH SKAL GUARD MODEL SG-102, 103, AND 104 OR APPROVED EQUAL.
12. ARRANGE WATER HEATERS TO PROVIDE EASE OF DISASSEMBLY, MAINTENANCE, VENDOR RECOMMENDATIONS AND REPLACEMENT.
13. PIPES PASSING THROUGH 1 HOUR FIRE RATED WALLS AND FLOORS SHALL BE SEALED WITH U.L. LISTED MATERIAL 2M FIRE BARRIER, CAULK OR PUTTY OR ENGINEERING APPROVED EQUAL.
14. EQUIPMENT START UP SHALL BE BY MANUFACTURER'S AUTHORIZED REPRESENTATIVES.
15. SHOWER HEAD ESCUTCHEONS SHALL BE RIGIDLY ATTACHED TO THE WALL USING "POLYSEAM SEAL" CAULKING MATERIAL OR APPROVED EQUAL.
16. FLOOR SINKS SHALL BE LOCATED SO AS NOT TO CREATE TRIPPING HAZARDS WHEN ROUTING DRAINING LINES AT FLOOR LEVEL. VERIFY EXACT DRAIN LINE ROUTING PRIOR TO FLOOR SINK ROUGH IN.
17. PROVIDE WALL CLEANOUTS AT SINKS AND URINALS IN ACCORDANCE WITH APPLICABLE SECTION OF THE INTERNATIONAL PLUMBING CODE.
18. PLUMBING RISER ISOLATION AND DRAIN VALVES, HOT WATER RE-CIRCULATION (HWC) THROTTLING VALVES (CIRCUIT SETTERS), AND HOT AND COLD WATER SHUT OFF VALVES SHALL BE LOCATED WITHIN EASY REACH OF CEILING, WHERE CEILINGS OCCUR, OR BELOW AND DROPPED TO WITHIN A MAXIMUM 10'-0" ABOVE FINISHED FLOOR WHERE NO CEILING OCCURS.
19. WHERE ADA COMPLIANT WATER CLOSET IS INDICATED (VERIFIED WITH ARCHITECTURAL DRAWINGS), LOCATE WATER VALVE ABOVE TOILET (OR OPTIONAL ON WIDE SIDE OF STALL) PER ADA STANDARDS.
20. INSULATED PIPING EXPOSED TO VIEW THROUGHOUT THE FACILITY SHALL BE COVERED AND FINISHED WITH PVC JACKETING EQUAL TO "PERMAPIPE" USING 30 MIL THICK JACKET OR APPROVED EQUAL. INSTALL PER MANUFACTURER'S INSTRUCTIONS WITH SEAM ON TOP OF PIPE.
21. ALL UNDERSLAB PIPING SHALL HAVE NO JOINTS AND SHALL BE CONTINUOUS. PROVIDE A 6 MIL POLYETHYLENE SLEEVE SYSTEM EQUAL TO IPS WATERTITE FOR COPPER DOMESTIC WATER PIPE BELOW SLAB.
22. HOT AND COLD WATER SHUT OFF VALVES AND HOT WATER RETURN CIRCUIT SETTERS SHALL BE LOCATED FOR EASY ACCESS.
23. FOR ALL FLUSH VALVE TOILETS, PROVIDE WATER HAMMER ARRESTORS EQUAL TO WATTS REGULATOR #15 SERIES, AS REQUIRED. PROVIDE ON HOT AND COLD-WATER PIPING SYSTEMS IN ACCORDANCE WITH MANUFACTURER'S INSTALLATION RECOMMENDATIONS. DEVICES SHALL BE PDI CERTIFIED AND ANSI APPROVED.
24. TRAP GUARDS, EQUAL TO PROSET, SHALL BE INSTALLED FOR FLOOR SINKS AND FLOOR DRAINS IN MECHANICAL ROOMS, FLOOR DRAINS IN TOILET ROOMS, AND INSTALLED PER MANUFACTURERS REQUIREMENTS.
25. WATER PIPING SHALL BE ROUTED AROUND ELECTRICAL ROOMS. WATER PIPING SHALL NOT BE INSTALLED IN ELECTRICAL ROOM, IF NO OTHER ROUTING IS AVAILABLE, CONTRACTOR TO COORDINATE WITH ENGINEER PRIOR TO PROCEEDING WITH WORK.
26. PROVIDE CLEAN OUTS IN WASTE PIPING PER IPC SECTION 708, IPC SECTIONS 708.1.3 AND IPC SECTION 708.1.4, AND PER LOCAL JURISDICTION CODE AND AMENDMENTS.
27. PROVIDE BACKFLOW ASSEMBLIES PER IPC SECTION 608.1 AND IPC SECTION 608.1.1 AND PER ALL LOCAL JURISDICTION CODE AND AMENDMENTS.
28. INDIRECT WASTE PIPING SHALL CONFORM TO IPC CHAPTER 8 AS WELL AS ALL LOCAL JURISDICTION CODE AND AMENDMENTS.
29. PROTECT ALL PIPES FROM FREEZING PER IPC SECTION 305.4 AS WELL AS ALL LOCAL JURISDICTION CODE AND AMENDMENTS.
30. ALL MATERIALS WITHIN THE CEILING PLENUM SHALL BE NONCOMBUSTIBLE OR SHALL BE LISTED AND LABELED AS HAVING A FLAME SPREAD INDEX OF NOT MORE THAN 25 AND A SMOKE-DEVELOPED INDEX OF NOT MORE THAN 50 WHEN TESTED IN ACCORDANCE WITH ASTM E84 OR UL723 PER SECTION 602.2.1 OF THE 2015 IMC.

# CODES

WHERE APPLICABLE, THE GUIDANCE SET FORTH IN THE 2015 IECC CODE SHALL GOVERN THE SCOPE OF WORK UNDER THIS CONTRACT. THE CODE SECTIONS RELATING TO THE PLUMBING SCOPE OF WORK INCLUDE, BUT ARE NOT LIMITED TO:

SECTION 303 - MATERIALS, SYSTEMS AND EQUIPMENT
- SECTION 303.3 - MAINTENANCE INFORMATION

SECTION 404 - SERVICE WATER HEATING

SECTION 406 - ADDITIONAL EFFICIENCY PACKAGE OPTIONS
- SECTION 406.1 - REQUIREMENTS
- SECTION 406.5 - ON-SITE RENEWABLE ENERGY
- SECTION 406.7 - REDUCED ENERGY USE IN SERVICE WATER HEATING

SECTION 407 - TOTAL BUILDING PERFORMANCE

SECTION 408 - SYSTEM COMMISSIONING
- SECTION 408.1 - GENERAL
- SECTION 408.2 - MECHANICAL SYSTEMS AND SERVICE WATER-HEATING SYSTEMS COMMISSIONING AND COMPLETION REQUIREMENTS

SECTION 501 - GENERAL

SECTION 502 - ADDITIONS

SECTION 503 - ALTERATIONS
- SECTION 503.5 - SERVICE HOT WATER SYSTEMS

SECTION 505 - CHANGE OF OCCUPANCY OR USE

# LEGEND AND SYMBOLS

## TRANSITIONS

- PIPE CAP
- PIPE TRANSITION UP
- PIPE TRANSITION DOWN
- PIPE TAP/TEE DOWN

## DOMESTIC WATER SYSTEM

- REDUCED PRESSURE BACKFLOW PREVENTER
- RE-CIRCULATION PUMP
- GLOBE VALVE
- ANGLE VALVE
- ISOLATION VALVE
- CHECK VALVE
- WATER METER
- WALL HYDRANT
- DOMESTIC COLD WATER (CW)
- DOMESTIC HOT WATER (HW)
- DOMESTIC HOT WATER RECIRCULATION (HWC)
- —KHW— KITCHEN HOT WATER (140°)
- —TW— TEMPERED WATER
- —FCW— FILTERED COLD WATER

## WASTE AND VENT SYSTEM

- FLOOR CLEANOUT (FCO)
- GRADE CLEANOUT (GCO)
- WALL CLEANOUT (WCO)
- FLOOR DRAIN (FD)
- FLOOR SINK (FS)
- AIR ADMITTANCE VALVE (AAV)
- WASTE (W)
- GREASE WASTE (GW)
- VENTING (V)
- CONDENSATE DRAIN (DRN)

## PROCESS FLOW DIAGRAM

- AIR SEPARATOR
- BACKFLOW PREVENTOR
- PRESSURE GAUGE
- TEMPERATURE GAUGE
- UNION
- FLEXIBLE PIPE CONNECTOR
- PUMP
- ISOLATION VALVE
- GATE VALVE
- PRESSURE REGULATING VALVE
- CHECK VALVE
- TEMP. & PRESSURE RELIEF VALVE
- GLOBE VALVE
- MIXING VALVE
- THREE-WAY VALVE
- STRAINER

## GENERAL

- # KEY NOTE
- # FEEDER TAG
- # GENERAL EQUIPMENT TAG
- XXX # M/E/P EQUIPMENT TAG
- POINT OF CONNECTION
- NOT IN CONTRACT
- DEMOLITION

## ABBREVIATIONS

### GENERAL

| | |
|---|---|
| AC | ABOVE COUNTER |
| AFF | ABOVE FINISHED FLOOR |
| AG | ABOVE GRADE |
| DN | DOWN |
| EC | ELECTRICAL CONTRACTOR |
| GC | GENERAL CONTRACTOR |
| MC | MECHANICAL CONTRACTOR |
| MEP | MECHANICAL, ELECTRICAL, PLUMBING |
| MFR | MANUFACTURER |
| NIC | NOT IN CONTRACT |
| NTS | NOT TO SCALE |
| POC | POINT OF CONNECTION |
| QTY | QUANTITY |
| TCC | TEMPERATURE CONTROL CONTRACTOR |
| W/ | WITH |
| W/O | WITHOUT |
| WO | WALL OPENING (ABOVE CEILING) |

### SCOPE

| | |
|---|---|
| (E) | EXISTING |
| (N) | NEW |
| (R) | RELOCATED |
| (V) | VENDOR |

### PLUMBING

| | |
|---|---|
| CW | COLD WATER |
| DRN | DRAIN |
| FCW | FILTERED COLD WATER |
| GW | GREASE WASTE |
| HW | HOT WATER |
| HWC | HOT WATER RE-CIRCULATION |
| IE | INVERT ELEVATION |
| ORD | OVERFLOW ROOF DRAIN |
| RD | ROOF DRAIN |
| RPBFP | REDUCED PRESSURE BACKFLOW PREVENTER |
| TW | TEMPERED WATER |
| V | VENT |
| VTR | VENT THROUGH ROOF |
| W | WASTE |

# SHEET NOMENCLATURE

X - X - # # # . X

**LEVEL 1 DESIGNATION**

| | |
|---|---|
| M | MECHANICAL |
| E | ELECTRICAL |
| P | PLUMBING |
| MD | MECH. DEMOLITION |
| ED | ELEC. DEMOLITION |
| PD | PLUM. DEMOLITION |

**LEVEL 2 DESIGNATION ***

* MAY NOT APPLY FOR COMBINED SHEETS

| | |
|---|---|
| H | HVAC |
| G | GAS |
| D | PROCESS |
| P | POWER |
| L | LIGHTING |
| W | WATER |
| S | SANITARY (WASTE) |

**SHEET TYPE DESIGNATION**

| | |
|---|---|
| 0 | GENERAL |
| 1 | PLANS |
| 2 | ELEVATIONS |
| 3 | SECTIONS |
| 4 | LARGE SCALE PLANS |
| 5 | DETAILS |
| 6 | SCHEDULES & CALCULATIONS |
| 7 | DIAGRAMS |
| 8 | < NOT USED > |
| 9 | ISOMETRICS |

**SHEET NUMBER**

01 - 99

**SUPPLEMENTAL**

| | |
|---|---|
| 1 - 9 | FLOORS |
| B | BASEMENT |
| M | MEZZANINE |
| R | ROOF |

BID/RBD SET

REVISIONS

| | DATE | FOR |
|---|---|---|
| △ | | |
| △ | | |
| △ | | |
| △ | | |

COLORADO LICENSED PROFESSIONAL ENGINEER 0051275 09-10-2020 Exp 10/31/21

51EC INC.
31 NORTH TEJON ST, SUITE 304
COLORADO SPRINGS, CO 80903
FIFTYONEEC.COM
T 719.368.7394

TDG Architecture
201 East Las Animas Street, Suite 113
Colorado Springs, CO 80903
719.623.5641 (Phone)
719.623.5643 (Fax)

EL PASO COUNTY

EL PASO COUNTY
JUDICIAL BUILDING SOUTH
RESTROOM REMODEL – LEVEL 2
270 SOUTH TEJON STREET
COLORADO SPRINGS, CO 80903

LEGEND, NOTES AND SPECIFICATIONS

DATE: 09/10/2020
DRAWN BY: JWB/JLV
CHECKED BY: AIS
PROJECT NO: 5136-20-05C
SHEET NO: P-001

PLOT DATE: 09/10/20 10:16 AM BY: JERIKA VALERIO PROJ. FILE: P:\Tremmel Design Group\Judicial Court House, South Tower, Restrooms Remodel\Plumbing\Judicial Court House, South Tower, Restrooms Remodel – L2 – Plumbing.dwg

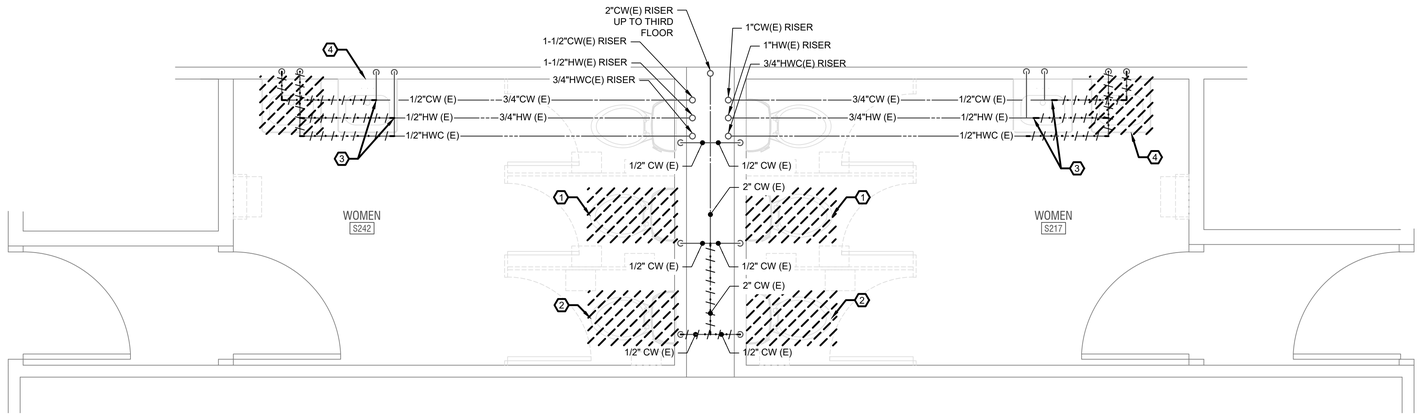


## LEVEL 2 "S242" AND "S217" WATER PIPING DEMOLITION PLAN

SCALE: 1/2" = 1'-0"

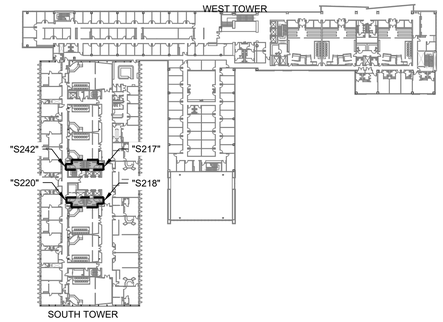


KEY MAP

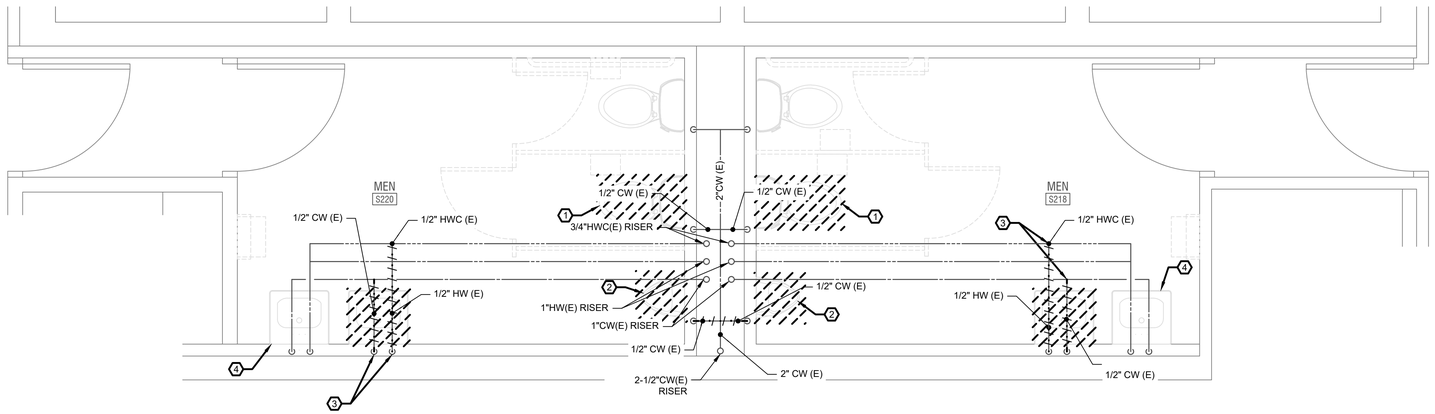


## LEVEL 2 "S220" AND "S218" WATER PIPING DEMOLITION PLAN

SCALE: 1/2" = 1'-0"

## GENERAL NOTES:

EXISTING LAYOUT AND ROUTING HAVE BEEN COMPLETED TO THE BEST OF THE ENGINEER'S ABILITY. SHOULD EXISTING CONDITIONS DIFFER FROM LAYOUT SHOWN, CONTRACTOR SHALL NOTIFY AND COORDINATE WITH ENGINEER TO ADDRESS ANY DISCREPANCIES.

FIELD VERIFY EXACT LOCATION OF EXISTING WATER PIPE PRIOR TO COMMENCING WORK. PRESUMED LOCATION OF EXISTING WATERLINE. ACTUAL CONDITIONS UNKNOWN AND NOT OBSERVABLE.

## DEMOLITION KEY NOTES:

1. REMOVE AND DEMOLISH EXISTING FIXTURE. DEMOLISH AND CAP 1/2"CW BACK TO WALL. SEE P-W-103 FOR RECONNECTION.
2. REMOVE AND DEMOLISH EXISTING FIXTURE. DEMOLISH AND CAP 1/2"CW BACK TO WALL.
3. REMOVE AND DEMOLISH EXISTING FIXTURE. DEMOLISH AND CAP 1/2"H&CW APPROXIMATE LOCATION.
4. FIXTURE TO BE REPLACED WITH ADA COMPLIANT LAVATORY. RETAIN H&CW CONNECTIONS FOR NEW WORK. SEE SHEET P-W-103.

BID/RBD SET

| REVISIONS | | |
|---|---|---|
| | DATE | FOR |
| 1 | | |
| 2 | | |
| 3 | | |
| 4 | | |

COLORADO LICENSED 0051275 09-10-2020 PROFESSIONAL ENGINEER

Exp 10/4/20


51EC INC.
31 NORTH TEJON ST, SUITE 304
COLORADO SPRINGS, CO 80903
FIFTYONEEC.COM
T 719.368.7394

TDG Architecture
201 East Las Animas Street, Suite 113
Colorado Springs, CO 80903
719.623.5641 (Phone)
719.623.5643 (Fax)


EL PASO COUNTY

EL PASO COUNTY
JUDICIAL BUILDING SOUTH
RESTROOM REMODEL – LEVEL 2
270 SOUTH TEJON STREET
COLORADO SPRINGS, CO 80903

LEVEL 2
WATER PIPING
DEMOLITION PLAN

DATE: 09/10/2020
DRAWN BY: JWB/JLV
CHECKED BY: AIS
PROJECT NO: 5136-20-05C
SHEET NO:

PD-W-103


PLOT DATE: 09/10/20 10:16 AM BY: JERIKA VALERIO PROJ. FILE: P:\Vermeil Design Group\Judicial Court House, South Tower, Restrooms Remodel\Plumbing\Judicial Court House, South Tower, Restrooms Remodel – L2 – Plumbing.dwg

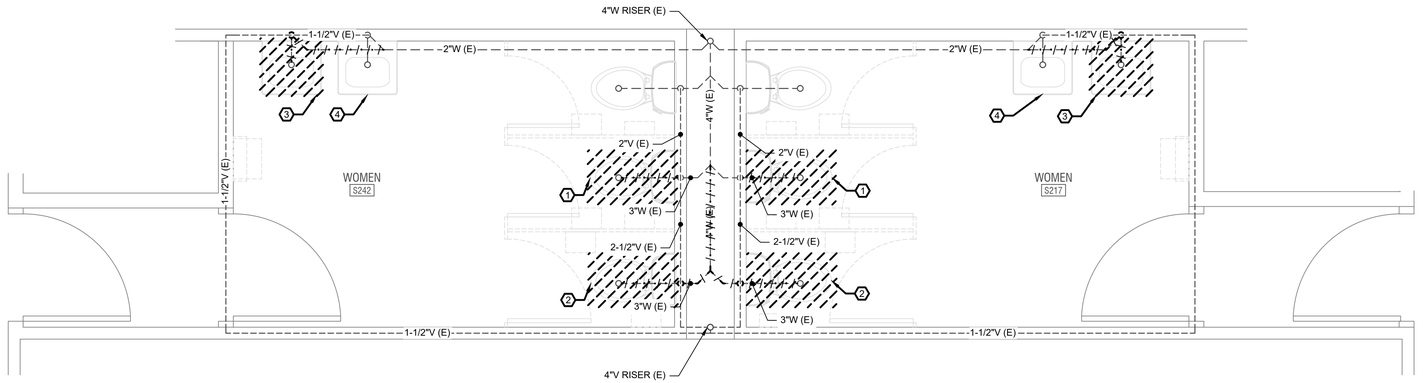


LEVEL 2 "S242" AND "S217" WASTE & VENT DEMOLITION PLAN
SCALE: 1/2" = 1'-0"

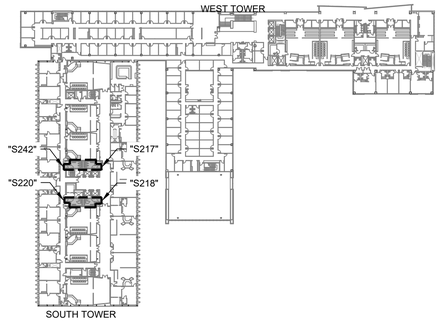


KEY MAP

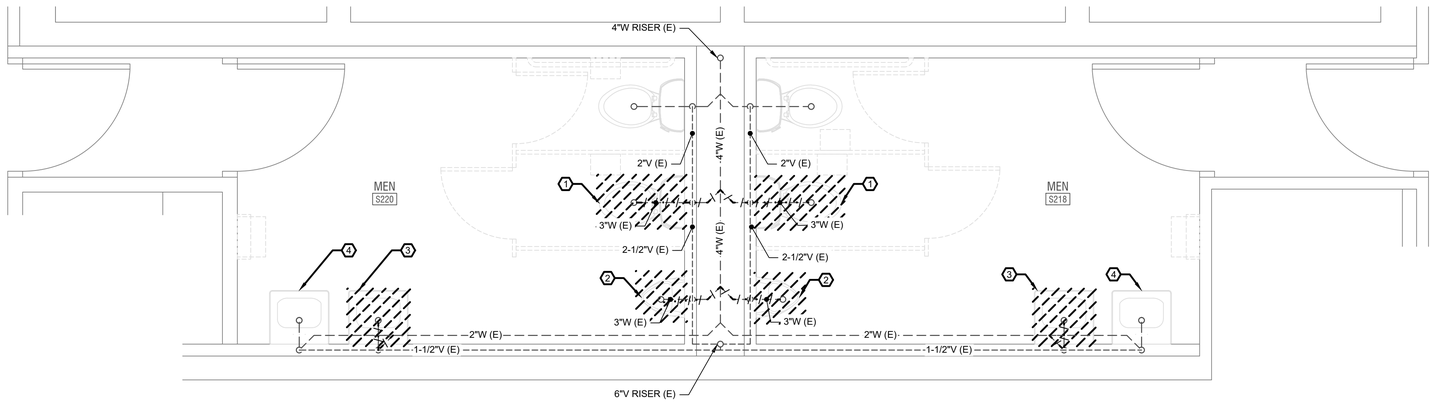


LEVEL 2 "S220" AND "S218" WASTE & VENT DEMOLITION PLAN
SCALE: 1/2" = 1'-0"

## GENERAL NOTES:

EXISTING LAYOUT AND ROUTING HAVE BEEN COMPLETED TO THE BEST OF THE ENGINEER'S ABILITY. SHOULD EXISTING CONDITIONS DIFFER FROM LAYOUT SHOWN, CONTRACTOR SHALL NOTIFY AND COORDINATE WITH ENGINEER TO ADDRESS ANY DISCREPANCIES.

FIELD VERIFY EXACT LOCATION OF EXISTING WASTE AND VENT PIPE PRIOR TO COMMENCING WORK. PRESUMED LOCATION OF EXISTING WASTELINE AND VENTLINE. ACTUAL CONDITIONS UNKNOWN AND NOT OBSERVABLE.

## DEMOLITION KEY NOTES:

1. REMOVE AND DEMOLISH EXISTING FIXTURE. DEMOLISH AND CAP 3"W BACK TO WALL. SEE P-S-103 FOR RECONNECTIONS.
2. REMOVE AND DEMOLISH EXISTING FIXTURE. DEMOLISH AND CAP 3"W BACK TO WALL. DEMOLISH AND CAP VENT PIPING AS NEEDED.
3. REMOVE AND DEMOLISH EXISTING FIXTURE. DEMOLISH AND CAP 2"W BACK TO WALL. DEMOLISH AND CAP VENT PIPING AS NEEDED.
4. FIXTURE TO BE REPLACED WITH ADA COMPLIANT LAVATORY. RETAIN EXISTING WASTE AND VENT CONNECTIONS FOR NEW WORK. SEE SHEET P-S-103.

BID/RBD SET

| REVISIONS | | |
|---|---|---|
| | DATE | FOR |
| △ | | |
| △ | | |
| △ | | |
| △ | | |

COLORADO LICENSED PROFESSIONAL ENGINEER 0051275 09-10-2020 EXP 10/31/2

51EC INC.
31 NORTH TEJON ST, SUITE 304
COLORADO SPRINGS, CO 80903
FIFTYONEEC.COM
T 719.368.7394

TDG Architecture
201 East Las Animas Street, Suite 113
Colorado Springs, CO 80903
719.623.5641 (Phone)
719.623.5643 (Fax)

EL PASO COUNTY

EL PASO COUNTY
JUDICIAL BUILDING SOUTH
RESTROOM REMODEL – LEVEL 2
270 SOUTH TEJON STREET
COLORADO SPRINGS, CO 80903

LEVEL 2
WASTE & VENT
DEMOLITION PLAN

DATE: 09/10/2020
DRAWN BY: JWB/JLV
CHECKED BY: AIS
PROJECT NO: 5136-20-05C
SHEET NO:
PD-S-103

PLOT DATE: 09/10/20 10:17 AM BY: JERKA VALERIO PROJ. FILE: P:\Tremmel Design Group\Judicial Court House, South Tower, Restrooms Remodel\Plumbing\Judicial Court House, South Tower, Restrooms Remodel – L2 – Plumbing.dwg

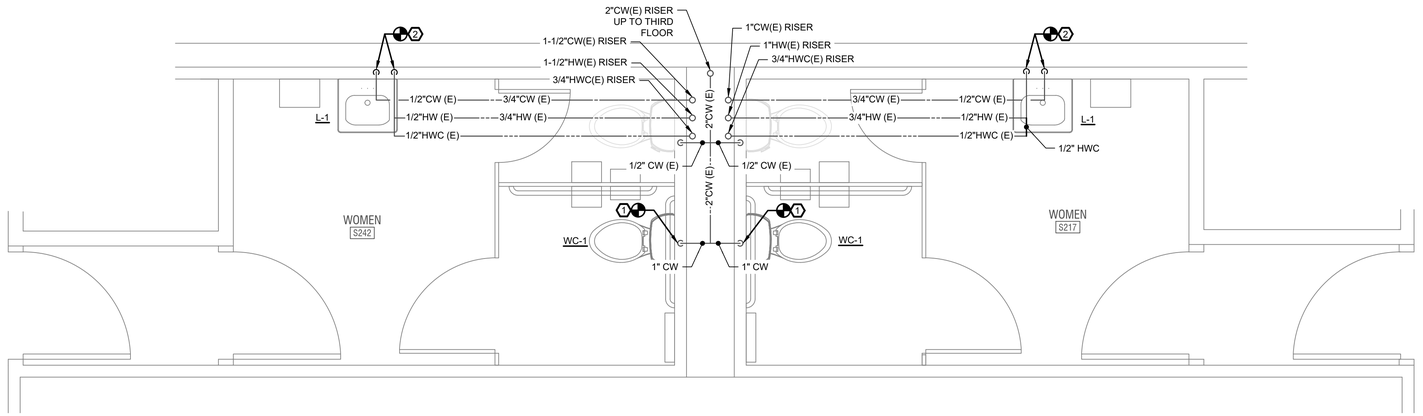


## LEVEL 2 "S242" AND "S217" WATER PIPING NEW WORK PLAN

SCALE: 1/2" = 1'-0"

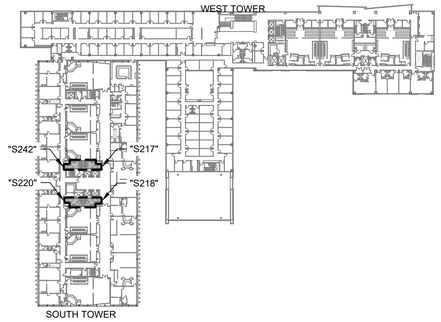


## KEY MAP

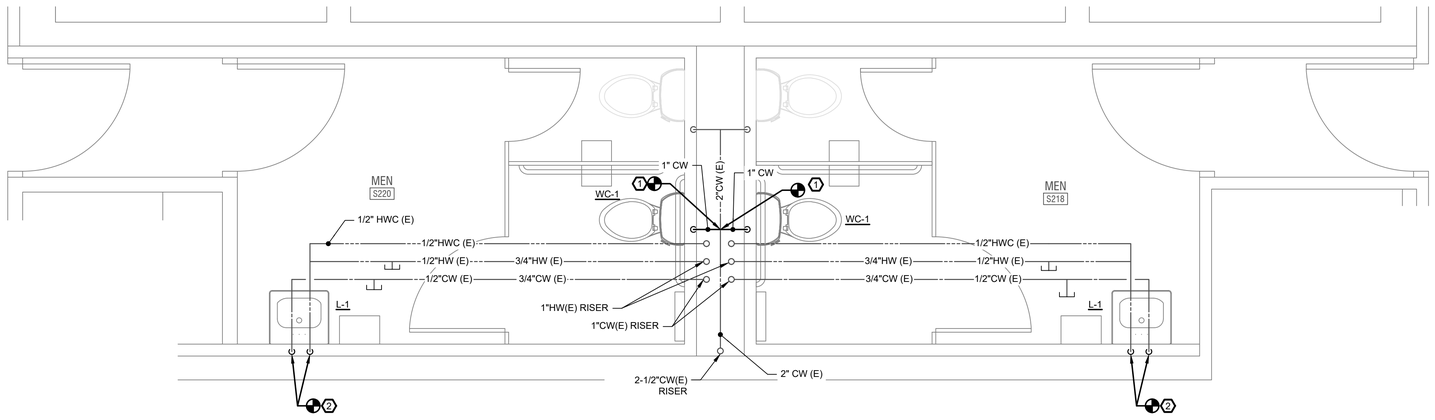


## LEVEL 2 "S220" AND "S218" WATER PIPING NEW WORK PLAN

SCALE: 1/2" = 1'-0"

## GENERAL NOTES:

ALL PIPING PENETRATIONS THROUGH RATED ASSEMBLIES ARE TO BE SEALED AND PROTECTED BY FIRE RESISTANT CAULKING.

## NEW WORK KEY NOTES:

1. CONTRACTOR TO TIE IN 1"CW TO EXISTING 2"CW.
2. CONTRACTOR TO TIE IN NEW ADA COMPLIANT LAVATORY TO EXISTING 1/2"H&CW AND TO CONFIRM 1/2"HWC TIES INTO 1/2"HW WITHIN 2' OF FIXTURE PER 2015 IECC.

BID/RBD SET

| REVISIONS | | |
|---|---|---|
| | DATE | FOR |
| 1 | | |
| 2 | | |
| 3 | | |
| 4 | | |

COLORADO LICENSED
JESSE W. BOWLES
0051275
09-10-2020
PROFESSIONAL ENGINEER
Exp 10/31/20


51EC INC.
31 NORTH TEJON ST, SUITE 304
COLORADO SPRINGS, CO 80903
FIFTYONEEC.COM
T 719.368.7394

TDG Architecture
201 East Las Animas Street, Suite 113
Colorado Springs, CO 80903
719.623.5641 (Phone)
719.623.5643 (Fax)


EL PASO COUNTY

EL PASO COUNTY
JUDICIAL BUILDING SOUTH
RESTROOM REMODEL – LEVEL 2
270 SOUTH TEJON STREET
COLORADO SPRINGS, CO 80903

LEVEL 2
WATER PIPING
NEW WORK PLAN

DATE: 09/10/2020
DRAWN BY: JWB/JLV
CHECKED BY: AIS
PROJECT NO: 5136-20-05C
SHEET NO:

P-W-103


PLOT DATE: 09/10/20 10:17 AM BY: JERIKA VALERIO PROJ. FILE: P:\Vermeer Design Group\Judicial Court House, South Tower, Restrooms Remodel\Plumbing\Judicial Court House, South Tower, Restrooms Remodel – L2 – Plumbing.dwg

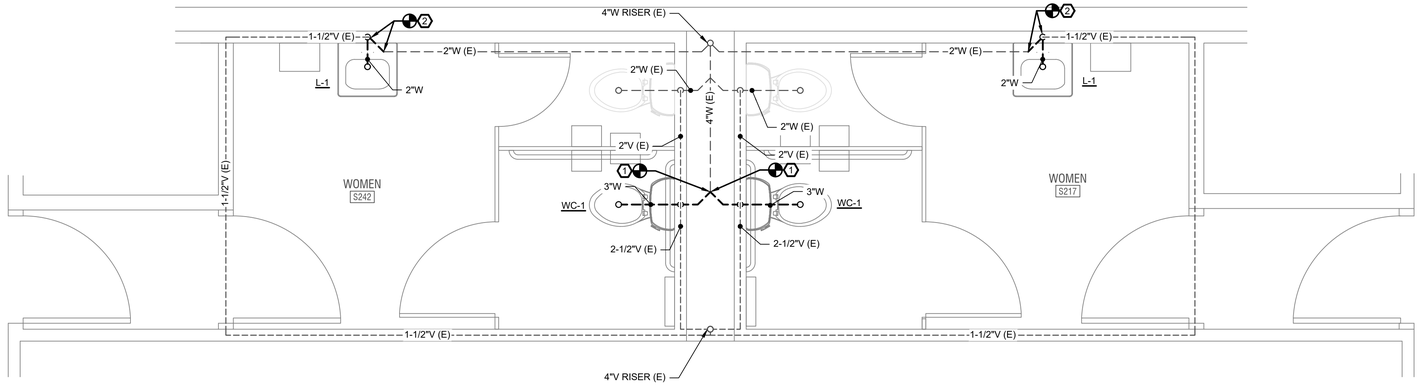


LEVEL 2 "S242" AND "S217 WASTE & VENT NEW WORK PLAN

SCALE: 1/2" = 1'-0"

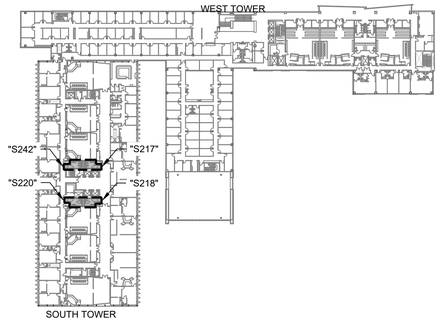


KEY MAP

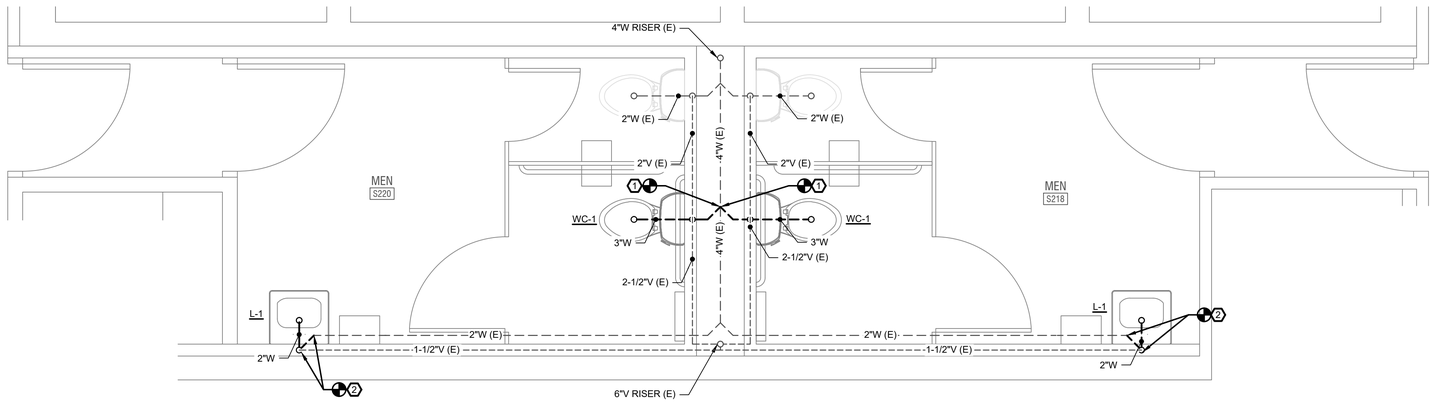


LEVEL 2 "S220" AND "S218" WASTE & VENT NEW WORK PLAN

SCALE: 1/2" = 1'-0"

## GENERAL NOTES:

CONTRACTOR TO INSTALL CLEANOUTS AT NEW FIXTURES AND WASTE PIPING AS REQUIRED BY SECTION 708 OF THE 2015 IPC. REFER TO FIXTURE SCHEDULE ON SHEET P-SCH-00 FOR CLEANOUT INFORMATION.

ALL PIPING PENETRATIONS THROUGH RATED ASSEMBLIES ARE TO BE SEALED AND PROTECTED BY FIRE RESISTANT CAULKING.

## NEW WORK KEY NOTES:

1. CONTRACTOR TO TIE IN WC-1 TO EXISTING 2-1/2"V AND 4"W.
2. CONTRACTOR TO TIE IN NEW ADA COMPLIANT LAVATORY TO EXISTING WASTE AND VENT.

BID/RBD SET

| REVISIONS | | |
|---|---|---|
| | DATE | FOR |
| 1 | | |
| 2 | | |
| 3 | | |
| 4 | | |

COLORADO LICENSED
JOSEPH A. LEVY
No. 0051275
09-10-2020
PROFESSIONAL ENGINEER
EXP 10/4/20


51EC INC.
31 NORTH TEJON ST, SUITE 304
COLORADO SPRINGS, CO 80903
FIFTYONEEC.COM
T 719.368.7394

TDG Architecture
201 East Las Animas Street, Suite 113
Colorado Springs, CO 80903
719.623.5641 (Phone)
719.623.5643 (Fax)


EL PASO COUNTY

EL PASO COUNTY
JUDICIAL BUILDING SOUTH
RESTROOM REMODEL – LEVEL 2
270 SOUTH TEJON STREET
COLORADO SPRINGS, CO 80903

LEVEL 2
WASTE & VENT
NEW WORK PLAN

| | |
|---|---|
| DATE: | 09/10/2020 |
| DRAWN BY: | JWB/JLV |
| CHECKED BY: | AIS |
| PROJECT NO: | 5136-20-05C |
| SHEET NO: | P-S-103 |


PLOT DATE: 09/10/20 10:17 AM BY: JERIKA VALERIO PROJ. FILE: P:\Vermeil Design Group\Judicial Court House, South Tower, Restrooms Remodel\Plumbing\Judicial Court House, South Tower, Restrooms Remodel – L2 – Plumbing.dwg

# PLUMBING FIXTURE SCHEDULE

| MARK | DESCRIPTION | WASTE | VENT | COLD | HOT |
|---|---|---|---|---|---|
| WC-1 | WATER CLOSET (ADA COMPLIANT) (FLUSH VALVE WITH FLUSH SENSOR)<br>EQUAL TO AMERICAN STANDARD MODEL #3043.660.020, "MADERA" 1.6 GPF TOP SPUD 17" HEIGHT BOWL WITH BATTERY OPERATED AUTOMATIC FLUSH VALVE, FLOOR MOUNTED, WHITE, VITREOUS CHINA WITH ELONGATED BOWL AND FLUSHOMETER VALVE TOILET. PROVIDE OPEN FRONT SEAT LESS COVER, BOLT COVERS AND ANGLE SUPPLY VALVES WITH STOP. SEAT HEIGHT SHALL BE BETWEEN 17" AND 19" ABOVE FINISHED FLOOR FOR ADA COMPLIANCE. FIXTURE SHALL BE 1.0 GPF. | 3" | 1-1/2" | 1" | --- |
| L-1 | LAVATORY (ADA COMPLIANT, WALL-MOUNT) (WITH SENSOR FAUCET)<br>EQUAL TO AMERICAN STANDARD MODEL #0356.027, "LUCERNE" 20"x18" WALL-HUNG LAVATORY, VITREOUS CHINA, FRONT OVERFLOW, D-SHAPED BOWL, 4" CENTER HOLES WITH AMERICAN STANDARD, BATTERY OPERATED ELECTRONIC PROXIMITY LAVATORY GOOSENECK #4IH819. PROVIDE OPEN GRID STRAINER WITH OFFSET TAILPIECE, CAST BRASS "P" TRAP, TRAP ARM AND 3/8" FLEX, SUPPLY VALVES, AND STOPS. SECURE ROUGH-INS TO WALL STRUCTURE AND INSULATE EXPOSED DRAIN AND HOT WATER PIPING WITH BROCAR OR APPROVED EQUAL. MAXIMUM FLOW RATE OF 0.5 GPM AND PROVIDE TEMPERING VALVE EQUAL TO WATTS MODEL #LFMMV, SET @ 110° F. | 2" | 1-1/2" | 1/2" | 1/2" |

# 2ND FLOOR WATER PIPE SIZE ANALYSIS

| | |
|---|---|
| ROOM S217 PLUMBING | |
| EXISTING 2" CW PIPE SERVES THE WATER CLOSETS AND 3/4" H&CW PIPES SERVE THE LAVATORIES | |
| DEMOLISHED FIXTURE UNITS | 1 LAVATORY AND 2 WATER CLOSETS = 22 WSFU |
| ADDED FIXTURE UNITS | 1 WATER CLOSET = 10 WSFU |
| SUMMARY | NET REDUCTION -12 WSFU'S TO EXISTING PLUMBING |
| ROOM S242 PLUMBING | |
| EXISTING 2" CW PIPE SERVES THE WATER CLOSETS AND 3/4" H&CW PIPES SERVE THE LAVATORIES | |
| DEMOLISHED FIXTURE UNITS | 1 LAVATORY AND 2 WATER CLOSETS = 22 WSFU |
| ADDED FIXTURE UNITS | 1 WATER CLOSET = 10 WSFU |
| SUMMARY | NET REDUCTION -12 WSFU'S TO EXISTING PLUMBING |
| ROOM S218 PLUMBING | |
| EXISTING 2"CW PIPE SERVES THE WATER CLOSETS AND 3/4"H&CW PIPE SERVES THE LAVATORIES. | |
| DEMOLISHED FIXTURE UNITS | 1 LAVATORY, 1 WATER CLOSET, AND 1 URINAL = 17 WSFU |
| ADDED FIXTURE UNITS | 1 WATER CLOSET = 10 WSFU |
| SUMMARY | NET REDUCTION -7 WSFU'S TO EXISTING PLUMBING |
| ROOM S220 PLUMBING | |
| EXISTING 2"CW PIPE SERVES THE WATER CLOSETS AND 3/4"H&CW PIPE SERVES THE LAVATORIES. | |
| DEMOLISHED FIXTURE UNITS | 1 LAVATORY, 1 WATER CLOSET, AND 1 URINAL = 17 WSFU |
| ADDED FIXTURE UNITS | 1 WATER CLOSET = 10 WSFU |
| SUMMARY | NET REDUCTION -7 WSFU'S TO EXISTING PLUMBING |

# PIPING MATERIALS SCHEDULE

| ALL PIPE AND FITTINGS LISTED ARE ONLY TO BE USED WHERE PERMITTED BY CODE | |
|---|---|
| SANITARY WASTE & VENT<br>(W & V) | SCHEDULE 10 CAST IRON WITH NO HUB OR BANDED CONNECTIONS AND FITTINGS |
| | *ALTERNATE: SCHEDULE 40 PVC, WITH PRIMED AND GLUED CONNECTIONS AND FITTINGS* |
| DOMESTIC COLD WATER (CW)<br>DOMESTIC HOT WATER (HW)<br>HOT WATER RECIRCULATION (HWC) | TYPE "L" COPPER PIPING, WITH SOLDERED OR BRAZED FITTINGS. SOFT COPPER UNDERSLAB WITH NO JOINTS. |
| | *ALTERNATE: PEX TUBING WITH BANDED CONNECTIONS AND FITTINGS* |
| DRAINAGE<br>(ORDL & RDL) | SCHEDULE 40 PVC, PRIMED AND GLUED OR THREADED CONNECTIONS AND FITTINGS. |

# PIPE INSULATION SCHEDULE

| FLUID OPERATING TEMPERATURE RANGE AND USAGE (°F) | INSULATION CONDUCTIVITY | | NOMINAL PIPING SIZE | | | |
|---|---|---|---|---|---|---|
| | (BTU * IN.) / (H * FT² * °F)ᵇ | MEAN RATING TEMP, °F | < 1" | 1" TO < 1-1/2" | 1-1/2" TO < 4" | 4" TO < 8" |
| > 350 | 0.32 - 0.34 | 250 | 4.5" | 5.0" | 5.0" | 5.0" |
| 251 - 350 | 0.29 - 0.32 | 200 | 3.0" | 4.0" | 4.5" | 4.5" |
| 201 - 250 | 0.27 - 0.30 | 150 | 2.5" | 2.5" | 2.5" | 3.0" |
| 141 - 200 | 0.25 - 0.29 | 125 | 1.5" | 1.5" | 2.0" | 2.0" |
| 105 - 140 | 0.21 - 0.28 | 100 | 1.0" | 1.0" | 1.5" | 1.5" |
| 40 - 60 | 0.21 - 0.27 | 75 | 0.5" | 0.5" | 1.0" | 1.0" |
| < 40 | 0.20 - 0.26 | 50 | 0.5" | 1.0" | 1.0" | 1.0" |

BID/RBD SET

| REVISIONS | | |
|---|---|---|
| | DATE | FOR |
| △ | | |
| △ | | |
| △ | | |
| △ | | |

COLORADO LICENSED
JEFFREY S. VALERO
0051275
09-10-2020
PROFESSIONAL ENGINEER
EXP 10/4/22


51EC INC.
31 NORTH TEJON ST, SUITE 304
COLORADO SPRINGS, CO 80903
FIFTYONEEC.COM
T 719.368.7394

TDG Architecture
201 East Las Animas Street, Suite 113
Colorado Springs, CO 80903
719.623.5641 (Phone)
719.623.5643 (Fax)


EL PASO COUNTY

EL PASO COUNTY
JUDICIAL BUILDING SOUTH
RESTROOM REMODEL – LEVEL 2
270 SOUTH TEJON STREET
COLORADO SPRINGS, CO 80903

SCHEDULES AND CALCULATIONS

DATE: 09/10/2020
DRAWN BY: JWB/JLV
CHECKED BY: AIS
PROJECT NO: 5136-20-05C
SHEET NO:

P-601


PLOT DATE: 09/10/20 10:17 AM BY: JENNA VALERO PROJ. FILE: P:\Vermeil Design Group\Judicial Court Houses, South Tower, Restrooms Remodel\Plumbing\Judicial Court Houses, South Tower, Restrooms Remodel – L2 – Plumbing.dwg