CALL UTILITY NOTIFICATION CENTER OF COLORADO 811
CALL 3 BUSINESS DAYS IN ADVANCE BEFORE YOU DIG, GRADE OR EXCAVATE FOR THE MARKING OF UNDERGROUND MEMBER UTILITIES.
Know what's below. Call before you dig.

Oversight / NHS		
FHWA REGION VIII OVERSIGHT ?	☑ NO	☐ YES
NATIONAL HIGHWAY SYSTEM ?	☑ NO	☐ YES

DEPARTMENT OF PUBLIC WORKS
EL PASO COUNTY

HIGHWAY CONSTRUCTION BID PLANS OF PROPOSED

Tanager Fence Plan

EL PASO COUNTY

PROJECT NO. 362483

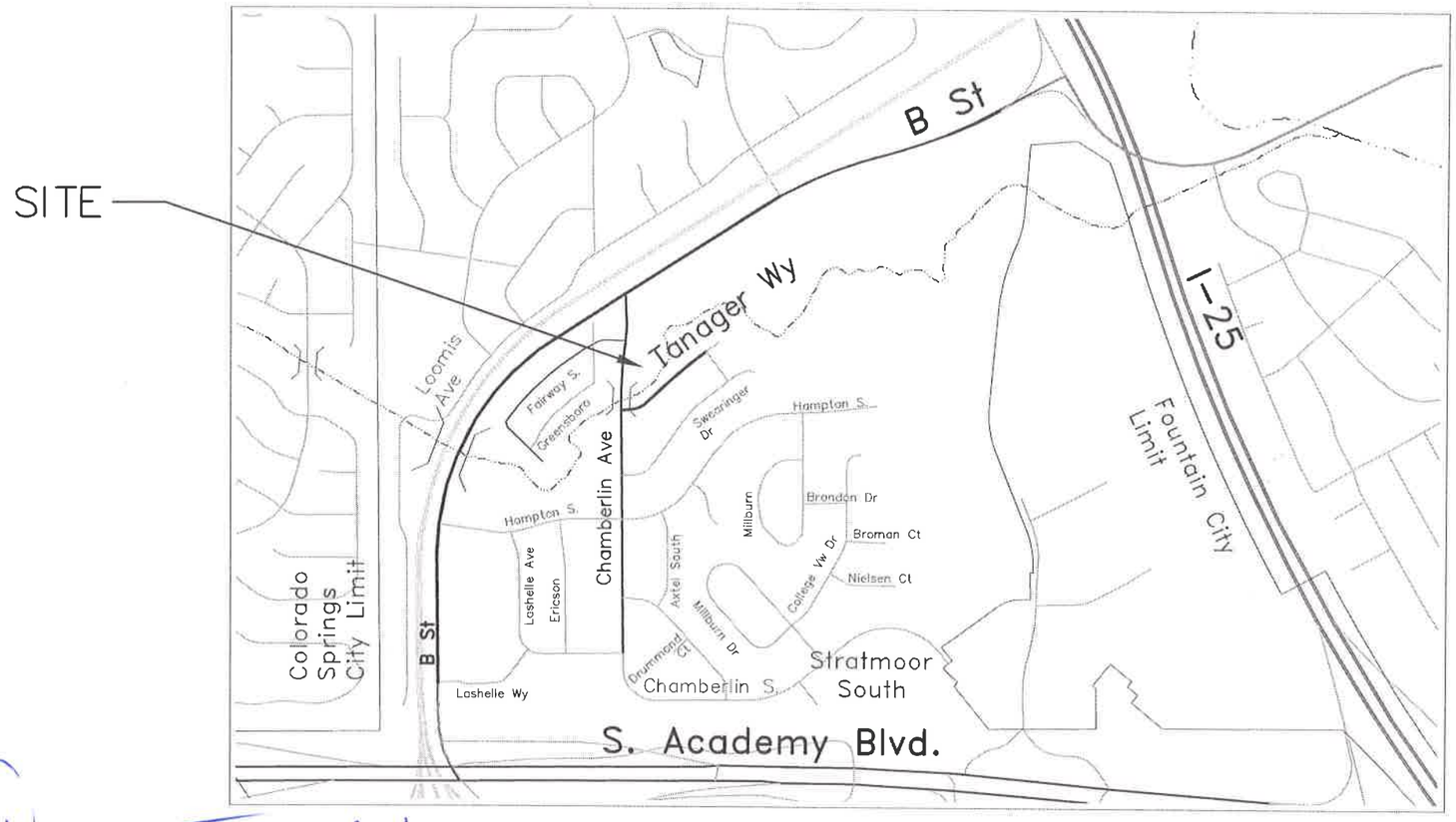

NTS

Sheet List Table

Sheet No.	Sheet Name
1	Cover Sheet
2	Standard Plans List
3	General Notes
4	Summary of Approx. Qtys.
5	Fence Plan
6	Existing Utility Plan
7	SWMP–General Notes
8	Erosion Control Plan
9	Stormwater Mgmt Plan
10	Stormwater Mgmt Plan
11	Stormwater Mgmt Plan
12	Stormwater Mgmt Plan
13	Stormwater Mgmt Plan
14	Stormwater Mgmt Plan
15	Stormwater Mgmt Plan
16	M–208–1 Sht 1 of 11
17	M–208–1 Sht 2 of 11
18	Chain Link Fence M 607–2
19	Chain Link Fence M 607–2
20	Chain Link Fence M 607–2

UTILITIES CONTACTS

FIBER OPTIC	CENTURY LINK	ROBERT TOMASELLI	719–248–7819
FIBER OPTIC	COMCAST	BUTCH BUSTER	303–603–5682
GAS	CSU	TONY COLVIN	719–648–0869
ELECTRIC	CSU	TONY COLVIN	719–648–0869
SEWER	CSU	TONY COLVIN	719–648–0869
WATER	STRATMOOR HILLS WATER	NANCY LEE WATKINS	719–649–8953

BID SET 7/18/22

JOSHUA J. PALMER, P.E.
COUNTY ENGINEER

7/28/22
DATE

NOTE: ALL SCALES IN DRAWINGS ARE FOR FULL SIZE (11" x 17") PRINTS

PROJECT LOCATION
Tanager Way @ I-25 Mt. South of B Street
Section 4, T13S, R66W

Computer File Information			
Creation Date:	2/3/2021	Initials:	JT
Last Modification Date:	7/18/22	Initials:	DAN
Full Path:	P:_ENGINEERING_Projects\TANAGER WAY-2015 Disaster_362483\CONTRACT\Fence-IFB\CADD\Drawings		
Drawing File Name:	TanagerCover – Sht00		
Acad. Ver. Civ3D 2018	Scale: n/a	Units:	Feet

Index of Revisions		
R–		
R–		
R–		
R–		
R–		

El Paso County
Department of Public Works
3275 Akers Drive
Colorado Springs, Colorado 80922–1547
Ph: 719–520–6460 Fax: 719–520–6878
Division of Transportation

As Constructed	
No Revisions:	mm/dd/yy
Revised:	mm/dd/yy
Void:	mm/dd/yy

EPCDOT Construction Project	
. contractor	
Project Manager JI	
Project Engineer OAL	
PROJECT STARTED mm/dd/yy	ACCEPTED mm/dd/yy
Comments:	

Project No./Code	
362483	
Sheet Number	1

P:_ENGINEERING_Projects\TANAGER WAY - 2015 Disaster_362483\CONTRACT\Fence - IFB\CADD\Drawings\TanagerCover.dwg, Sht00, 7/18/2022 7:20:25 AM, dotnorton, Supersedes All Previously Dated Sets
P:_ENGINEERING_Projects\TANAGER WAY - 2015 Disaster_362483\CONTRACT\Fence - IFB\CADD\Drawings\TanagerCover.dwg
© El Paso County Public Services Department

P:_ENGINEERING_Projects\TANAGER WAY - 2015 Disaster_362483\CONTRACT\Fence - IFB\CADD\Drawings\TanagerCover.dwg, PlanList, 7/18/2022 7:20:26 AM, dotnorton, Supersedes All Previously Dated Sets

CALL UTILITY NOTIFICATION CENTER OF COLORADO 811
CALL 3 BUSINESS DAYS IN ADVANCE BEFORE YOU DIG, GRADE, OR EXCAVATE FOR THE MARKING OF UNDERGROUND MEMBER UTILITIES.
Know what's below. Call before you dig.

BID SET 7/18/22

PLAN NUMBER	M STANDARD TITLE	PAGE NUMBER
☐ M-100-1	STANDARD SYMBOLS (3 SHEETS)	1–3
☐ M-100-2	ACRONYMS AND ABBREVIATIONS (4 SHEETS)	4–7
☐ M-203-1	APPROACH ROADS	8
☐ M-203-2	DITCH TYPES	9
☐ M-203-11	SUPERELEVATION CROWNED AND DIVIDED HIGHWAYS (3 SHEETS)	10–12
☐ M-203-12	SUPERELEVATION STREETS (2 SHEETS)	13–14
☐ M-206-1	EXCAVATION AND BACKFILL FOR STRUCTURES (2 SHEETS)	15–16
☐ M-206-2	EXCAVATION AND BACKFILL FOR BRIDGES (2 SHEETS)	17–18
■ M-208-1	TEMPORARY EROSION CONTROL (11 SHEETS)	19–29
☐ M-210-1	MAILBOX SUPPORTS (2 SHEETS)	30–31
☐ M-214-1	NURSERY STOCK DETAILS	32
☐ M-216-1	SOIL RETENTION COVERING (2 SHEETS)	33–34
☐ M-412-1	CONCRETE PAVEMENT JOINTS (9 SHEETS) ~~35–39~~ *(REVISED ON JANUARY 31, 2022)*	
☐ M-412-2	CONCRETE PAVEMENT CRACK REPAIR (4 SHEETS) *(NEW, ISSUED ON OCTOBER 7, 2019)*	
☐ M-510-1	STRUCTURAL PLATE PIPE H-20 LOADING	40
☐ M-601-1	SINGLE CONCRETE BOX CULVERT (CAST-IN-PLACE) (2 SHEETS)	41–42
☐ M-601-2	DOUBLE CONCRETE BOX CULVERT (CAST-IN-PLACE) (2 SHEETS)	43–44
☐ M-601-3	TRIPLE CONCRETE BOX CULVERT (CAST-IN-PLACE) (2 SHEETS)	45–46
☐ M-601-10	HEADWALL FOR PIPES	47
☐ M-601-11	TYPE "S" SADDLE HEADWALLS FOR PIPE	48
☐ M-601-12	HEADWALLS AND PIPE OUTLET PAVING	49
☐ M-601-20	WINGWALLS FOR PIPE OR BOX CULVERTS (2 SHEETS)	50–51
☐ M-603-1	METAL PIPE (4 SHEETS)	52–55
☐ M-603-2	REINFORCED CONCRETE PIPE	56
☐ M-603-3	PRECAST CONCRETE BOX CULVERT ~~57~~ *(REVISED ON SEPTEMBER 10, 2020)*	
☐ M-603-4	CORRUGATED POLYETHYLENE PIPE (AASHTO M294) AND CORRUGATED POLYPROPYLENE PIPE (AASHTO M330) (2 sheets) ~~58~~ *(REVISED ON MARCH 7, 2022)*	
☐ M-603-5	POLYVINYL CHLORIDE (PVC) PIPE (AASHTO M304)	59
☐ M-603-6	STEEL REINFORCED POLYETHYLENE RIBBED PIPE (AASHTO MP 20)	60
☐ M-603-10	CONCRETE AND METAL END SECTIONS	61
☐ M-603-12	TRAVERSABLE END SECTIONS AND SAFETY GRATES (3 SHEETS)	62–64
☐ M-604-10	INLET, TYPE C	65
☐ M-604-11	INLET, TYPE D	66
☐ M-604-12	CURB INLET TYPE R (2 SHEETS)	67–68
☐ M-604-13	CONCRETE INLET TYPE 13	69
☐ M-604-20	MANHOLES (3 SHEETS)	70–72
☐ M-604-25	VANE GRATE INLET (5 SHEETS)	73–77
☐ M-605-1	SUBSURFACE DRAINS	78

PLAN NUMBER	M STANDARD TITLE	PAGE NUMBER
☐ M-606-1	MIDWEST GUARDRAIL SYSTEM TYPE 3 W-BEAM 31 INCHES (19 SHEETS) ~~79–97~~ *(REVISED ON MARCH 5, 2020)*	
☐ M-606-13	GUARDRAIL TYPE 7 F-SHAPE BARRIER (4 SHEETS)	98–101
☐ M-606-14	PRECAST TYPE 7 CONCRETE BARRIER (4 SHEETS) ~~102–104~~ *(REVISED ON AUGUST 21, 2020)*	
☐ M-606-15	GUARDRAIL TYPE 9 SINGLE SLOPE BARRIER (11 SHEETS) ~~105–115~~ *(REVISED ON MARCH 5, 2020)*	
☐ M-607-1	WIRE FENCES AND GATES (3 SHEETS)	116–118
■ M-607-2	CHAIN LINK FENCE (3 SHEETS)	119–121
☐ M-607-3	BARRIER FENCE	122
☐ M-607-4	DEER FENCE, GATES, AND GAME RAMPS (7 SHEETS) ~~123–127~~ *(REVISED ON JULY 13, 2020)*	
☐ M-607-10	PICKET SNOW FENCE	128
☐ M-607-15	ROAD CLOSURE GATE (9 SHEETS)	129–137
☐ M-608-1	CURB RAMPS (10 SHEETS)	138–147
☐ M-609-1	CURBS, GUTTERS, AND SIDEWALKS (4 SHEETS)	148–151
☐ M-611-1	CATTLE GUARD (2 SHEETS)	152–153
☐ M-611-2	DEER GUARD (2 SHEETS)	154–155
☐ M-614-1	RUMBLE STRIPS (3 SHEETS)	156–158
☐ M-614-2	SAND BARREL ARRAYS (2 SHEETS)	159–160
☐ M-615-1	EMBANKMENT PROTECTOR TYPE 3	161
☐ M-615-2	EMBANKMENT PROTECTOR TYPE 5	162
☐ M-616-1	INVERTED SIPHON	163
☐ M-620-1	FIELD LABORATORY CLASS 1	164
☐ M-620-2	FIELD LABORATORY CLASS 2 (2 SHEETS)	165–166
☐ M-620-11	FIELD OFFICE CLASS 1	167
☐ M-620-12	FIELD OFFICE CLASS 2	168
☐ M-629-1	SURVEY MONUMENTS (2 SHEETS)	169–170

PLAN NUMBER	S STANDARD TITLE	PAGE NUMBER
☐ S-612-1	DELINEATOR INSTALLATIONS (8 SHEETS)	171–178
☐ S-613-1	ROADWAY LIGHTING (6 SHEETS) ~~179–186~~ *(REVISED ON SEPTEMBER 30, 2020)*	
☐ S-613-2	ALTERNATIVE ROADWAY LIGHTING (4 SHEETS) *(NEW, ISSUED ON SEPTEMBER 30, 2020)*	
☐ S-614-1	GROUND SIGN PLACEMENT (2 SHEETS)	187–188
☐ S-614-2	CLASS I SIGNS	189
☐ S-614-3	CLASS II SIGNS	190
☐ S-614-4	CLASS III SIGNS (3 SHEETS)	191–193
☐ S-614-5	BREAK-AWAY SIGN SUPPORT DETAILS FOR CLASS III SIGNS (2 SHEETS)	194–195
☐ S-614-6	CONCRETE FOOTINGS AND SIGN ISLANDS FOR CLASS III SIGNS (2 SHEETS)	196–197
☐ S-614-8	TUBULAR STEEL SIGN SUPPORT DETAILS (7 SHEETS) *(REVISED ON DECEMBER 31, 2020)*	198–204
~~S-614-9~~	~~PEDESTRIAN PUSH BUTTON POST ASSEMBLY (2 SHEETS)~~ *(SUPERSEDED ON JANUARY 23, 2020 BY S-614-45)*	~~205–206~~
☐ S-614-10	MARKER ASSEMBLY INSTALLATIONS	207
☐ S-614-11	MILEPOST SIGN DETAIL FOR HIGH SNOW AREAS	208
☐ S-614-12	STRUCTURE NUMBER INSTALLATION (2 SHEETS)	209–210
☐ S-614-14	FLASHING BEACON AND SIGN INSTALLATIONS (4 SHEETS)	211–214
☐ S-614-20	TYPICAL POLE MOUNT SIGN INSTALLATIONS	215
☐ S-614-21	CONCRETE BARRIER SIGN POST INSTALLATIONS (2 SHEETS) *(REVISED ON SEPTEMBER 21, 2020)*	216–217
☐ S-614-22	TYPICAL MULTI-SIGN INSTALLATIONS	218
☐ S-614-40	TYPICAL TRAFFIC SIGNAL 30'-75' DOUBLE MAST ARMS 65'-75' SINGLE MAST ARMS (5 SHEETS)	219–223
☐ S-614-40A	ALTERNATIVE TRAFFIC SIGNAL 25'-55' SINGLE MAST ARMS (4 SHEETS)	224–227
☐ S-614-41	TEMPORARY SPAN WIRE SIGNALS (13 SHEETS)	228–240
☐ S-614-42	CABINET FOUNDATION DETAIL (4 SHEETS)	241–244
☐ S-614-43	TRAFFIC LOOP AND MISCELLANEOUS SIGNAL DETAILS (8 SHEETS)	245–252
☐ S-614-44	PEDESTAL POLE SIGNALS (2 SHEETS)	253–254
☐ S-614-45	PEDESTRIAN PUSH BUTTON POST ASSEMBLY DETAILS (6 SHEETS) *(REVISED ON DECEMBER 3, 2020)*	
☐ S-614-50	STATIC SIGN MONOTUBE STRUCTURES (12 SHEETS)	255–266
☐ S-614-60	DYNAMIC SIGN MONOTUBE STRUCTURES (14 SHEETS)	267–280
☐ S-627-1	PAVEMENT MARKINGS (9 SHEETS) *(REVISED ON FEBRUARY 16, 2021)*	281–289
☐ S-630-1	TRAFFIC CONTROLS FOR HIGHWAY CONSTRUCTION (24 SHEETS)	290–313
☐ S-630-2	BARRICADES, DRUMS, CONCRETE BARRIERS (TEMP) AND VERTICAL PANELS	314
☐ S-630-3	FLASHING BEACON (PORTABLE) DETAILS	315
☐ S-630-4	STEEL SIGN SUPPORT (TEMPORARY) INSTALLATION DETAILS (2 SHEETS)	316–317
☐ S-630-5	PORTABLE RUMBLE STRIPS (TEMPORARY) (2 SHEETS)	318–319
☐ S-630-6	EMERGENCY PULL-OFF AREA (TEMPORARY)	320
☐ S-630-7	ROLLING ROADBLOCKS FOR TRAFFIC CONTROL (3 SHEETS)	321–323

COLORADO
DEPARTMENT OF TRANSPORTATION

M&S STANDARDS PLANS LIST

July 31, 2019

Revised on March 7, 2022

ALL OF THE M&S STANDARD PLANS, AS SUPPLEMENTED AND REVISED, APPLY TO THIS PROJECT WHEN USED BY DESIGNATED PAY ITEM OR SUBSIDIARY ITEM.

THE M&S STANDARD PLANS USED TO DESIGN THIS PROJECT ARE INDICATED BY A MARKED BOX ■ AND WILL BE ATTACHED TO THE PLANS. ALL THE OTHER M&S STANDARD PLANS ARE STILL ELIGIBLE FOR CONSTRUCTION IF APPROVED BY AN APPROPRIATE CDOT ENGINEER.

Computer File Information			
Creation Date:	2/3/2021	Initials:	xxx
Last Modification Date:	7/18/2022	Initials:	xxx
Full Path:	P:_ENGINEERING_Projects\TANAGER WAY - 2015 Disaster_362483\CONTRACT\Fence - IFB\CADD\Drawings		
Drawing File Name:	TanagerCover – PlanList		
Acad. Ver. Civ3D 2018 Scale:	n/a	Units:	n/a

Index of Revisions		
(R–)		
(R–)		
(R–)		
(R–)		
(R–)		

El Paso County
Department of Public Works
3275 Akers Drive
Colorado Springs, Colorado 80922-1547
Ph: 719-520-6460 Fax: 719-520-6878
Division of Transportation

As Constructed
No Revisions:
Revised:
Void:

Tanager Fence Plan
Standard Plans List

Designer:
Detailer:
Sheet Subset:
Structure Numbers
Subset Sheets: of

Project No./Code
362483

Sheet Number 2

P:_ENGINEERING_Projects\TANAGER WAY - 2015 Disaster_362483\CONTRACT\Fence - IFB\CADD\Drawings\TanagerCover.dwg, GenNote, 7/18/2022 7:20:30 AM, dotnorton, Supersedes All Previously Dated Sets

CALL UTILITY NOTIFICATION CENTER OF COLORADO 811
CALL 3 BUSINESS DAYS IN ADVANCE BEFORE YOU DIG, GRADE, OR EXCAVATE FOR THE MARKING OF UNDERGROUND MEMBER UTILITIES.

811 Know what's below. Call before you dig.

BID SET 7/18/22

P:_ENGINEERING_Projects\TANAGER WAY - 2015 Disaster_362483\CONTRACT\Fence - IFB\CADD\Drawings\TanagerCover.dwg

BASIS OF BEARINGS
ALL BEARINGS ARE BASED ON THE LINE BETWEEN A FOUND No. 4 REBAR AT THE SOUTHWEST CORNER OF ASSESSOR'S PARCEL NUMBER 6504300040 LOCATED AT 1785 B STREET, COLORADO SPRINGS, COLORADO ALSO BEING A CORNER ON THE NORTHERLY LINE OF TRACT "A", COLLEGE PARK SUBDIVISION No. 1 AS RECORDED IN PLAT BOOK V-3 AT PAGE 129 OF THE RECORDS OF THE CLERK AND RECORDER OF EL PASO COUNTY, COLORADO TO A FOUND No. 4 REBAR W/CAP MARKED "WATTS 9853" AT AN ANGLE POINT OF THE SOUTHERLY LINE OF SAID PARCEL AND ALSO BEING AN ANGLE POINT OF THE NORTHERLY LINE OF SAID TRACT "A", AND IS ASSUMED TO BEAR NORTH 59°23'45" EAST A DISTANCE OF 207.47 FEET.

PROJECT DESCRIPTION

INSTALL NEW CHAIN-LINK FENCE TO HELP MITIGATE ILLICIT DUMPING FOR THE BENEFIT OF HEALTH AND PUBLIC WELLNESS OF THE SURROUNDING COMMERCIAL BUSINESSES, LOCAL RESIDENTS, AND THE TRAVELING PUBLIC.

GENERAL NOTES

1 THIS PROJECT SHALL BE CONSTRUCTED IN ACCORDANCE WITH THE COLORADO DEPARTMENT OF TRANSPORTATION STANDARD SPECIFICATIONS FOR ROAD AND BRIDGE CONSTRUCTION (2011) (REFERRED TO AS THE STANDARD SPECIFICATIONS), EXCEPT WHERE OTHERWISE NOTED ON THE PROJECT PLANS AND/OR THE PROJECT SPECIAL PROVISIONS.

2 THE CONTRACTOR SHALL HAVE A COPY OF ALL APPLICABLE STANDARDS ON SITE FOR THE DURATION OF THE PROJECT.

3 THE CONTRACTOR SHALL ACQUIRE ALL NECESSARY PERMITS AND INSPECTIONS REQUIRED TO COMPLETE THE SCOPE OF WORK PRESENTED HEREIN.

4 THE ENGINEER SHALL BE NOTIFIED 48 HOURS PRIOR TO COMMENCEMENT OF ANY CONSTRUCTION.

TRAFFIC CONTROL

5 ALL SIGNAGE AND STRIPING SHALL FOLLOW THE "MANUAL ON UNIFORM TRAFFIC CONTROL DEVICES", MUTCD, CURRENT EDITION, AND ALL APPLICABLE CDOT M&S STANDARDS.

6 THE CONTRACTOR SHALL SUBMIT AN MHT FOR APPROVAL BY THE COUNTY PRIOR TO INITIATING TRAFFIC CONTROL SETUP. THE CONTRACTOR SHALL FURNISH, INSTALL, AND MAINTAIN TEMPORARY TRAFFIC CONTROL DEVICES NECESSARY THROUGHOUT THE DURATION OF CONSTRUCTION IN CONFORMANCE WITH AN APPROVED MHT.

7 THE TRAFFIC CONTROL SUPERVISOR SHALL COORDINATE CONSTRUCTION ZONE TRAFFIC CONTROL ACTIVITIES WITH ALL APPROPRIATE OFFICIALS, INCLUDING BUT NOT LIMITED TO EMERGENCY SERVICES, SCHOOL, ETC.

UTILITY NOTES

8 THE CONTRACTOR SHALL CONTACT THE UTILITY NOTIFICATION CENTER OF COLORADO AT 811 THREE BUSINESS DAYS IN ADVANCE OF ANY EXCAVATING OR GRADING.

9 UTILITY FACILITIES EXIST WITHIN THE LIMITS OF PROPOSED CONSTRUCTION. THE CONTRACTOR SHALL COOPERATE AND COORDINATE WITH THE UTILITY OWNERS IN THEIR REMOVAL AND RELOCATION OPERATIONS DURING CONSTRUCTION SO THAT PROGRESS IS EXPEDITED.

10 THE LOCATIONS OF EXISTING STRUCTURES, PIPELINES, UTILITIES, ETC., SHOWN ON THE DRAWINGS HAVE BEEN DERIVED FROM THE BEST AVAILABLE INFORMATION. THERE MAY BE OTHER STRUCTURES, PIPELINES, UTILITIES, ETC., NOT SHOWN ON THE DRAWINGS WHICH PRESENTLY EXIST IN THE AREA OF CONSTRUCTION. THE ENGINEER AND/OR OWNER ASSUMES NO RESPONSIBILITY FOR THE ACCURACY OR COMPLETENESS OF THE INFORMATION SHOWN. THE CONTRACTOR WILL BE RESPONSIBLE FOR LOCATING AND PROTECTING ALL IMPACTED EXISTING STRUCTURES, PIPELINES, UTILITIES, ETC., IN THE PROJECT SITE, AND SHALL BE RESPONSIBLE FOR ANY DAMAGES THERETO.

11 THE CONTRACTOR SHALL PROTECT AND MAINTAIN ALL UTILITIES AND STRUCTURES AFFECTED BY THE WORK AND ANY DAMAGE SHALL BE REPAIRED AND RESTORED TO THE SATISFACTION OF THE ENGINEER OR APPLICABLE ENTITY AT THE CONTRACTOR'S EXPENSE.

12 THE CONTRACTOR SHALL NOTIFY THE ENGINEER WHERE UTILITIES CONFLICT WITH THE NEW WORK IN CONFORMANCE WITH THE SPECIFICATIONS. CONFLICT IS DEFINED WHERE THE NEW WORK CANNOT BE COMPLETED WITHOUT PROPER CLEARANCES AROUND THE UTILITY. WHERE FIELD VERIFICATION IS NOTED ON THE PLANS, THIS SHALL REQUIRE THE CONTRACTOR TO DETERMINE THE LOCATION OF THE FACILITY IN QUESTION PRIOR TO THE NEW CONSTRUCTION. A DETERMINATION SHALL BE MADE BY THE CONTRACTOR IF THE CURRENT DESIGN WILL MATCH THE EXISTING FACILITY AND NOTIFY THE ENGINEER IN WRITING IF IT DOES NOT.

13 A PRAGMATIC EFFORT HAS BEEN MADE TO SYSTEMATICALLY DESIGNATE AND DEPICT BURIED UTILITIES WITHIN EACH PROJECT LOCATION TO THE EXTENT PRACTICAL. FINAL UTILITY PLANS ARE FOR DESIGN PURPOSES ONLY AND REFLECT SUBSURFACE UTILITY CONDITIONS AT THE TIME SURVEYED. EXISTING UTILITY LOCATIONS DEPICTED ON THE PLANS DO NOT SUPERCEDE COLORADO STATE ONE CALL DEMARCATIONS OF BURIED UTILITIES. IT ALSO DOES NOT RELIEVE THE CONTRACTOR FROM THE LEGAL REQUIREMENT TO CALL ON CALL TWO WORKING DAYS PRIOR TO CONSTRUCTION. EL PASO COUNTY SHOULD BE NOTIFIED OF ANY DISCREPANCIES BETWEEN THE UTILITY DESIGNATION/LOCATING SURVEY AND ONE CALL MARKINGS. THE CONTRACTOR SHALL USE CAUTION UNTIL DISCREPANCIES ARE RESOLVED. EXISTING UTILITIES ARE LOCATED TO A QUALITY LEVEL B EXCEPT WHERE NOTED ACCORING TO ASCE 38-02. CONTRACTOR SHALL CALL THE UTILITY NOTIFICATION SERVICE BEFORE EXCAVATING AS REQUIRED BY LAW.

SURVEY NOTES

14 THE CONTRACTOR SHALL VERIFY THE LOCATIONS OF ALL CONSTRUCTION EASEMENTS WITH THE COUNTY.

15 THE CONTRACTOR SHALL CAREFULLY PRESERVE ALL MONUMENTS, BENCH MARKS, PROPERTY MARKERS, AND REFERENCE POINTS. IN CASE OF HIS DESTRUCTION OF THESE, THE CONTRACTOR WILL BE RESPONSIBLE FOR RESETTING SAME, AT HIS SOLE EXPENSE, AND SHALL BE RESPONSIBLE FOR ANY LOSS OF TIME THAT MAY BE CAUSED.

PROJECT ACTIVITY NOTES

16 ALL QUANTITIES ARE APPROXIMATE. THE CONTRACTOR SHALL BE RESPONSIBLE FOR ALL WORK NECESSARY TO COMPLETE THE CONSTRUCTION SHOWN IN THESE PLANS.

17 ALL MATERIALS AND WORKMANSHIP SHALL BE SUBJECT TO INSPECTION AND APPROVAL BY EL PASO COUNTY.

18 ALL WORK SHALL BE DONE TO THE LINES, GRADES, SECTIONS, AND ELEVATIONS SHOWN ON THE PLANS UNLESS OTHERWISE NOTED OR APPROVED BY THE ENGINEER IN WRITING.

19 ALL EXCESS MATERIAL REMOVED ON THIS PROJECT SHALL BECOME THE PROPERTY OF THE CONTRACTOR AND SHALL BE DISPOSED OF PROPERLY. HAULING WILL NOT BE PAID FOR SEPARATELY AND SHALL BE INCLUDED IN THE COST OF THE REMOVAL ITEM. THIS INCLUDES, BUT IS NOT LIMITED TO: CLEARING AND GRUBBING, EXCESS EXCAVATION, ASPHALT, AND CONCRETE.

20 CONSTRUCTION ACTIVITY SHALL BE SCHEDULED WITH MINIMUM IMPACT TO PEDESTRIAN AND VEHICULAR TRAFFIC. ALLOWABLE WORK HOURS ARE 7:00 AM-7:00 PM MONDAY-FRIDAY.

21 LIMITS OF REMOVAL ITEMS SHALL BE VERIFIED BY THE CONTRACTOR PRIOR TO THEIR REMOVAL. IF DISCREPANCIES ARISE BETWEEN THE DEMOLITION AND THE NEW WORK, THEN THE CONTRACTOR SHALL NOTIFY THE ENGINEER PRIOR TO DISTURBANCE.

22 IT WILL BE THE CONTRACTOR'S RESPONSIBILITY TO PROVIDE ANY TEMPORARY EXCAVATION SUPPORT AS REQUIRED. THIS SUPPORT WILL BE INCIDENTAL TO THE WORK AND WILL NOT BE PAID FOR SEPARATELY.

23 ALL EXCAVATED HOLES SHALL BE COVERED ANY TIME CONSTRUCTION WORK IS NOT IN PROGRESS (OVERNIGHT, WEEKENDS, HOLIDAYS). EXCAVATION SHORING SHALL COMPLY WITH OSHA STANDARDS. COST FOR SHORING AND STEEL PLATES WILL NOT BE PAID FOR SEPARATELY BUT SHALL BE INCLUDED IN THE WORK.

24 STRUCTURAL BACKFILL FILL SHALL BE COMPACTED TO 95% MAXIMUM DRY DENSITY AT ±2 OMC PER AASHTO T-180.

STORMWATER/BMP NOTES

25 AT ALL TIMES DURING THE CONSTRUCTION OF THE PROJECT, EROSION AND SEDIMENT CONTROL SYSTEMS SHALL BE MAINTAINED TO PREVENT DAMAGING FLOWS ON THE SITE AND IN THE RECEIVING WATERS BELOW THE SITE. CONTROL SYSTEMS SHALL BE INSTALLED PRIOR TO THE STRIPPING OF NATIVE VEGETATIVE COVER.

26 THE CONTRACTOR SHALL LIMIT CONSTRUCTION ACTIVITIES TO THOSE AREAS WITHIN THE LIMITS OF DISTURBANCE AND/OR TOES OF SLOPE AS SHOWN ON THE PLANS. ANY DISTURBANCE BEYOND THESE LIMITS SHALL BE RESTORED TO ORIGINAL CONDITIONS AT THE CONTRACTORS EXPENSE. CONSTRUCTION ACTIVITIES, IN ADDITION TO NORMAL CONSTRUCTION PROCEDURES, SHALL INCLUDE PARKING OF VEHICLES OR EQUIPMENT, DISPOSAL OF LITTER AND ANY OTHER ACTION WHICH WOULD ALTER EXISTING CONDITIONS.

27 TRACKING OF SOILS AND CONSTRUCTION DEBRIS FROM THE PROJECT SITE SHALL BE MINIMIZED. MATERIALS TRACKED BEYOND THE PROJECT AREA AND ONTO THE ROADWAY SHALL BE CLEANED UP DAILY AND DISPOSED OF PROPERLY. CLEANUP EFFORTS SHALL BE INCLUDED IN THE COST OF THE WORK.

28 THE MINIMUM THICKNESS OF THE TOPSOIL SHALL BE 4 INCHES. THE TOPSOIL SHALL BE APPLIED TO ALL DISTURBED SURFACES, OR AS DIRECTED BY THE ENGINEER.

29 IF CONCRETE TRUCKS ARE TO BE WASHED ONSITE, A TEMPORARY CONCRETE WASHOUT FACILITY SHALL BE CONSTRUCTED AND MAINTAINED WITH SUFFICIENT SIZE TO CONTAIN ALL LIQUID AND CONCRETE WASTE GENERATED BY WASHOUT OPERATIONS. CONCRETE WASHOUT AREAS SHALL BE LOCATED AT LEAST 50 HORIZONTAL FEET FROM STORM DRAINS AND WATERWAYS.

30 ALL EXISTING AREAS DISTURBED BY CONSTRUCTION ACTIVITIES SHALL BE REVEGETATED USING THE SEED MIX LISTED IN THE TABLE ON THIS SHEET. SEED SHALL BE HAND BROADCAST AT THE RATE OF 52 LBS OF PURE LIVE SEED (PLS) PER ACRE. ALL SEEDED AREAS SHALL BE COVERED WITH SOIL RETENTION BLANKET.

CDOT MIX

COMMON NAME	BOTANICAL NAME	PLS LBS/ACRE
BLUE GRAMA	BOUTELOUA GRACILIS V. HACHITA	2
WESTERN WHEATGRASS	PASCOPYRUM SMITHII V. ARRIBA	6
SIDEOATS GRAMA	BOUTELOUA CURTIPENDULA V. VAUGHN	3
LITTLE BLUESTEM	SCHIZACHYRIUM SCOPARIUM 'PASTURA'	3
GREEN NEEDLEGRASS	STIPA VIRIDULA V. LORDOM	3
SWITCHGRASS	PANICUM VIRGATUM 'DACOTAH'	4
JUNEGRASS	KOELERIA MACRANTHA	0.2
PRAIRIE CONEFLOWER	RATIBIDA COLUMNIFERA	0.3
PURPLE PRAIRIE CLOVER	RATIBIDA COLUMNARIS	0.5
GAILLARDIA	GAILLARDIA ARISTATA	1
OATS	AVENA SATIVA	3
TOTAL POUNDS OF PURE LIVE SEED (PLS) LBS PER ACRE		26

NOTE: SMALL AREAS THAT REQUIRE HAND BROADCAST SEEDING AND MULCHING SHALL BE SEEDED AT TWICE THESE RATES.

Computer File Information			
Creation Date:	2/3/2021	Initials:	JT
Last Modification Date:	7/18/2022	Initials:	DAN
Full Path:	P:_ENGINEERING_Projects\TANAGER WAY - 2015 Disaster_362483\CONTRACT\Fence - IFB\CADD\Drawings		
Drawing File Name:	TanagerCover - GenNote		
Acad. Ver. Civ3D 2018 Scale:	n/a	Units:	n/a

Index of Revisions		
R-		
R-		
R-		
R-		
R-		

El Paso County
Department of Public Works
3275 Akers Drive
Colorado Springs, Colorado 80922-1547
Ph: 719-520-6460 Fax: 719-520-6878
Division of Transportation

As Constructed	Tanager Fence Plan General Notes	Project No./Code
No Revisions:		362483
Revised:	Designer: OAL / Detailer: DAN / Structure Numbers	
Void:	Sheet Subset: / Subset Sheets: of	Sheet Number 3

P:_ENGINEERING_Projects\TANAGER WAY - 2015 Disaster_362483\CONTRACT\Fence - IFB\CADD\Drawings\TanagerCover.dwg, SumQuan, 7/18/2022 7:20:31 AM, dotnorton, Supersedes All Previously Dated Sets

CALL UTILITY NOTIFICATION CENTER OF COLORADO
811
CALL 3 BUSINESS DAYS IN ADVANCE BEFORE YOU DIG, GRADE, OR EXCAVATE FOR THE MARKING OF UNDERGROUND MEMBER UTILITIES.

Know what's below.
Call before you dig.

BID SET 7/18/22

P:_ENGINEERING_Projects\TANAGER WAY - 2015 Disaster_362483\CONTRACT\Fence - IFB\CADD\Drawings\TanagerCover.dwg

SUMMARY OF APPROXIMATE QUANTITIES – ROADWAY

NO.	ITEM	UNIT	PLAN QTY.
201–00000	CLEARING AND GRUBBING	LS	1
202–00009	TREE TRIMMING	LS	1
202–00010	REMOVAL OF TREE	EA	30
202–01000	REMOVAL OF FENCE	LF	500
203–01597	POTHOLING	HR	40
208–00000	VEHICLE TRACKING PAD	EA	1
208–00001	CONCRETE WASHOUT STRUCTURE	EA	1
208–00001	EROSION LOG TYPE I (12 INCH)	LF	1,000
208–00107	REMOVAL OF TRASH	HR	80
607–53172	FENCE CHAIN LINK (72 INCH)	LF	800
607–53196	FENCE CHAIN LINK (96 INCH)	LF	1,050
607–60208	8 FT GATE SINGLE (CHAIN LINK)	EA	2
607–60266	16 FT GATE DOUBLE (CHAIN LINK)	EA	1
620–00001	SANITARY FACILITY	EA	1
625–00000	CONSTRUCTION SURVEYING	LS	1
626–00000	MOBILIZATION	LS	1
700–00010	FORCE ACCOUNT – MINOR CONTRACT REVISION	FA	1

Computer File Information			
Creation Date:	2/3/2021	Initials:	JT
Last Modification Date:	7/18/2022	Initials:	DAN
Full Path:	P:_ENGINEERING_Projects\TANAGER WAY - 2015 Disaster_362483\CONTRACT\Fence - IFB\CADD\Drawings		
Drawing File Name:	TanagerCover – SumQuan		
Acad. Ver. Civ3D 2018 Scale:	n/a	Units:	n/a

Index of Revisions		
R–		
R–		
R–		
R–		
R–		

El Paso County
Department of Public Works
3275 Akers Drive
Colorado Springs, Colorado 80922–1547
Ph: 719–520–6840 Fax: 719–520–6878
Division of Transportation

As Constructed	
No Revisions:	
Revised:	
Void:	

Tanager Fence Plan Summary of Approx. Qtys.			
Designer:	OAL	Structure Numbers	
Detailer:	DAN		
Sheet Subset:		Subset Sheets:	of

Project No./Code	
362483	
Sheet Number	4

P:_ENGINEERING_Projects\TANAGER WAY - 2015 Disaster_362483\CONTRACT\Fence - IFB\CADD\Drawings\Tanager Fence Plan.dwg, Sht01, 7/18/2022 7:20:32 AM, dotnorton, Supersedes All Previously Dated Sets

CALL UTILITY NOTIFICATION CENTER OF COLORADO 811
CALL 3 BUSINESS DAYS IN ADVANCE BEFORE YOU DIG, GRADE, OR EXCAVATE FOR THE MARKING OF UNDERGROUND MEMBER UTILITIES.

811 Know what's below. Call before you dig.

LEGEND

- EXISTING TELEPHONE RISER . . . TR
- EXISTING ELECTRIC VAULT . . . . EV
- EXISTING MANHOLE . . . . . Ⓢ
- EXISTING FENCE LINE . . . X
- NEW FENCE LINE . . . . . .
- FOUND SURVEY POINT . . . . . .
- TO BE SET SURVEY . . . . . .
- EROSION CONTROL LOGS . .
- LIMITS CONST. AREA . . . LOA
- VTP VEHICLE TRACKING PAD
- CWS CONCRETE WASHOUT STRUCTURE
- FEMA Floodplain 100 Yr AE
- FEMA Floodplain 500 Year

B STREET

REC. NO. 97042260

REC. NO. 203173718

REC. NO. 212040639

1737-1785A B Street
1 Story Concrete Block
Commercial Building

1803 B Street

1807 B Street

1811 B Street

CHAMBERLIN SOUTH
(70' PUBLIC ROAD RIGHT OF WAY)
BOOK 2253, PAGE 657

4075 Chamberlain South
1 Story Brick Office
Building

Existing Chain-Link and Barbed-Wire fence to be remove
L=350.9'

N41°36'14"E
L=312.93'

FOUND #4 REBAR

N50°05'52"E
L=67.27'

N63°56'49"E
L=97.60'

N72°18'15"E
L=46.05'

15' TO TELEPHONE RISER

Property Line

New 8 Ft Gate
Single (Chain Link)

N17°16'57"E
L=38.46'

N29°26'47"W
L=96.76'

Start of New Chain-Link Fence (96 inch)
N = 1342825.59
E = 3201456.97

5.1' - WOODEN FENCE ENCROACHMENT

N59°27'56"E
L=144.71'

Existing Wooden Fence to be remove
L=136.1'

Center Of Gate
N = 1343337.19
E = 3202091.83

S81°24'05"E
L=156.92'

New 8 Ft Gate
Single (Chain Link)

S81°24'05"E
L=61.63'

End of New Chain Link Fence (96 inch) Tie In With Existing Fence
N = 1343327.28
E = 3202156.72

1825 B St.

CREEK

BOOK 193

End of New Chain-Link Fence (72 inch)
N = 1342637.92
E = 3201388.14

CONCRETE BLOCK RETAINING WALL

N79°10'8.2"W
L=17.95'

L=77.29'
R=100.00'
Δ=44°17'36"
ChB=S68°16'02"W
Ch=75.40'

S46°07'14"W
L=58.11'

L=361.57'
R=2030.00'
Δ=10°12'42"
ChB=S51°13'35"W
Ch=361.32'

New 16 Ft Gate
Double (Chain Link)
N = 1343024.41
E = 3201917.03

S56°19'56"W
L=40.36'

S33°49'56"W
L=26.46'

S19°51'10.4"W
L=34.81'

Start of New Chain-Link Fence (72 inch)
N = 1343084.68
E = 3201998.21

S56°19'56"W
L=37.14'

L=39.56'
R=100.56'
Δ=22°30'00"
ChB=S45°04'56"W
Ch=39.24'

L=73.96'
R=55.00'
Δ=76°04'57"
ChB=S71°52'25"W
Ch=67.79'

TANAGER WAY

SWMP BID SET 7/18/22

P:_ENGINEERING_Projects\TANAGER WAY - 2015 Disaster_362483\CONTRACT\Fence - IFB\CADD\Drawings\Tanager Fence Plan.dwg

Computer File Information			Index of Revisions
Creation Date:	12/30/2019	Initials: JT	R–
Last Modification Date:	7/18/22	Initials: DAN	R–
Full Path:	\TANAGER WAY-2015 Disaster_362483\CONTRACT\Fence-IFB\CADD\Drawings		R–
Drawing File Name:	Tanager Fence Plan.dwg – Sht01		R–
Acad. Ver. Civ3D 2016 Scale:	1"=50'	Units: Feet	R–

El Paso County
Department of Public Works
3275 Akers Drive
Colorado Springs, Colorado 80922–1547
Ph: 719–520–6460 Fax: 719–520–6878
Division of Transportation

As Constructed
No Revisions:
Revised:
Void:

Tanager Fence Plan
Fence Plan

Designer: JT
Detailer: JT
SheetSubset:
Structure Numbers
Subset Sheets: 1 of

Project No./Code: 362483

Sheet Number 5

P:_ENGINEERING_Projects\TANAGER WAY - 2015 Disaster_362483\CONTRACT\Fence - IFB\CADD\Drawings\SUE Plans.dwg, Sht01, 7/18/2022 7:20:34 AM, dotnorton, Supersedes All Previously Dated Sets

CALL UTILITY NOTIFICATION CENTER OF COLORADO 811
CALL 3 BUSINESS DAYS IN ADVANCE BEFORE YOU DIG, GRADE, OR EXCAVATE FOR THE MARKING OF UNDERGROUND MEMBER UTILITIES.

811 Know what's below. Call before you dig.

BID SET 7/18/22

P:_ENGINEERING_Projects\TANAGER WAY - 2015 Disaster_362483\CONTRACT\Fence - IFB\CADD\Drawings

LEGEND

- TELEPHONE RISER . . . . . TR
- ELECTRIC VAULT . . . . . EV
- MANHOLE . . . . . Ⓢ
- EXISTING FENCE LINE . . . —x—
- NEW FENCE LINE . . . . . —□—
- TELEPHONE LINE . . . . . T
- FIBER OPTICS . . . . . UFO
- 2" STEEL GAS MAIN . . . . . GAS
- UNDERGROUND ELECTRICAL LINE . . . . . UGE
- 8" SEWER LINE . . . . . SS

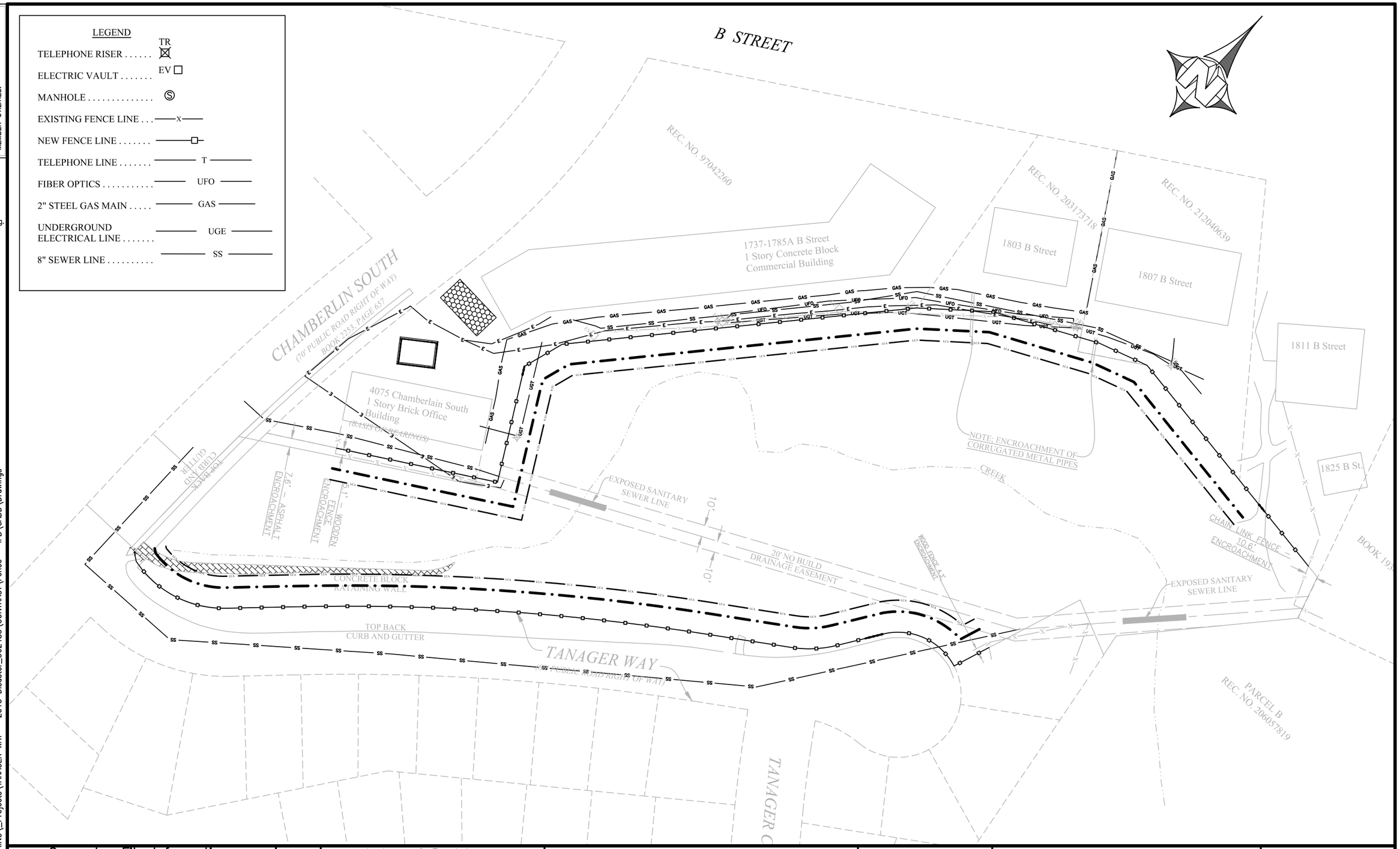

Computer File Information			
Creation Date:	4/14/2021	Initials:	JT
Last Modification Date:	7/18/2022	Initials:	DAN
Full Path:	\TANAGER WAY - 2015 Disaster_362483\CONTRACT\Fence - IFB\CADD\Drawings		
Drawing File Name:	SUE Plans – Sht01		
Acad. Ver. Civ3D 2016 Scale:	1"=80'	Units:	Feet

Index of Revisions		
R–		
R–		
R–		
R–		
R–		

El Paso County
Department of Public Works
3275 Akers Drive
Colorado Springs, Colorado 80922–1547
Ph: 719–520–6460 Fax: 719–520–6878
Division of Transportation

As Constructed
No Revisions:
Revised:
Void:

Tanager Fence Plan
Existing Utility Plan

Designer:	JT	Structure Numbers	
Detailer:	JT		
SheetSubset:		Subset Sheets:	1 of

Project No./Code
362483
Sheet Number 6

CALL UTILITY NOTIFICATION CENTER OF COLORADO 811
CALL 3 BUSINESS DAYS IN ADVANCE BEFORE YOU DIG, GRADE, OR EXCAVATE FOR THE MARKING OF UNDERGROUND MEMBER UTILITIES.
Know what's below. Call before you dig.

BID SET 7/18/22

P:_ENGINEERING_Projects\TANAGER WAY - 2015 Disaster_362483\CONTRACT\Fence - IFB\CADD\Drawings\TanagerCover.dwg, SWMP-GenNote, 7/18/2022 7:20:36 AM, dotnorton, Supersedes All Previously Dated

P:_ENGINEERING_Projects\TANAGER WAY - 2015 Disaster_362483\CONTRACT\Fence - IFB\CADD\Drawings\TanagerCover.dwg

GRADING AND EROSION CONTROL NOTES

1 STORMWATER DISCHARGES FROM CONSTRUCTION SITES SHALL NOT CAUSE OR THREATEN TO CAUSE POLLUTION, CONTAMINATION, OR DEGRADATION OF STATE WATERS. ALL WORK AND EARTH DISTURBANCE SHALL BE DONE IN A MANNER THAT MINIMIZES POLLUTION OF ANY ON-SITE OR OFF-SITE WATERS, INCLUDING WETLANDS.

2 NOTWITHSTANDING ANYTHING DEPICTED IN THESE PLANS IN WORDS OR GRAPHIC REPRESENTATION, ALL DESIGN AND CONSTRUCTION RELATED TO ROADS, STORM DRAINAGE AND EROSION CONTROL SHALL CONFORM TO THE STANDARDS AND REQUIREMENTS OF THE MOST RECENT VERSION OF THE RELEVANT ADOPTED EL PASO COUNTY STANDARDS, INCLUDING THE LAND DEVELOPMENT CODE, THE ENGINEERING CRITERIA MANUAL, THE DRAINAGE CRITERIA MANUAL, AND THE DRAINAGE CRITERIA MANUAL VOLUME 2. ANY DEVIATIONS FROM REGULATIONS AND STANDARDS MUST BE REQUESTED, AND APPROVED, IN WRITING.

3 A SEPARATE STORMWATER MANAGEMENT PLAN (SWMP) FOR THIS PROJECT SHALL BE COMPLETED AND AN EROSION AND STORMWATER QUALITY CONTROL PERMIT (ESQCP) ISSUED PRIOR TO COMMENCING CONSTRUCTION. MANAGEMENT OF THE SWMP DURING CONSTRUCTION IS THE RESPONSIBILITY OF THE DESIGNATED QUALIFIED STORMWATER MANAGER OR CERTIFIED EROSION CONTROL INSPECTOR. THE SWMP SHALL BE LOCATED ON SITE AT ALL TIMES DURING CONSTRUCTION AND SHALL BE KEPT UP TO DATE WITH WORK PROGRESS AND CHANGES IN THE FIELD.

4 ONCE THE ESQCP IS APPROVED AND A 'NOTICE TO PROCEED' HAS BEEN ISSUED, THE CONTRACTOR MAY INSTALL THE INITIAL STAGE EROSION AND SEDIMENT CONTROL MEASURES INDICATED ON THE APPROVED GEC. A PRECONSTRUCTION MEETING BETWEEN THE CONTRACTOR, ENGINEER, AND EL PASO COUNTY WILL BE HELD PRIOR TO ANY CONSTRUCTION. IT IS THE RESPONSIBILITY OF THE APPLICANT TO COORDINATE THE MEETING TIME AND PLACE WITH COUNTY STAFF.

5 CONTROL MEASURES MUST BE INSTALLED PRIOR TO COMMENCEMENT OF ACTIVITIES THAT COULD CONTRIBUTE POLLUTANTS TO STORMWATER. CONTROL MEASURES FOR ALL SLOPES, CHANNELS, DITCHES, AND DISTURBED LAND AREAS SHALL BE INSTALLED IMMEDIATELY UPON COMPLETION OF DISTURBANCE.

6 ALL TEMPORARY SEDIMENT AND EROSION CONTROL MEASURES SHALL BE MAINTAINED AND REMAIN IN EFFECTIVE OPERATION CONDITION UNTIL PERMANENT SOIL EROSION CONTROL MEASURES ARE IMPLEMENTED AND FINAL STABILIZATION IS ESTABLISHED. ALL PERSONS ENGAGED IN LAND DISTURBANCE ACTIVITIES SHALL ASSESS THE ADEQUACY OF CONTROL MEASURES AT THE SITE AND IDENTIFY IF CHANGES TO THOSE CONTROL MEASURES ARE NEEDED TO ENSURE THE CONTINUED EFFECTIVE PERFORMANCE OF THE CONTROL MEASURES. ALL CHANGES TO TEMPORARY SEDIMENT AND EROSION CONTROL MEASURES MUST BE INCORPORATED INTO THE STORMWATER MANAGEMENT PLAN.

7 TEMPORARY STABILIZATION SHALL BE IMPLEMENTED ON DISTURBED AREAS AND STOCKPILES WHERE GROUND DISTURBING CONSTRUCTION ACTIVITY HAS PERMANENTLY CEASED OR TEMPORARILY CEASED FOR LONGER THAN 14 DAYS.

8 FINAL STABILIZATION MUST BE IMPLEMENTED AT ALL APPLICABLE CONSTRUCTION SITES. FINAL STABILIZATION IS ACHIEVED WHEN ALL GROUND DISTURBING ACTIVITIES ARE COMPLETE AND ALL DISTURBED AREAS EITHER HAVE A UNIFORM VEGETATIVE COVER WITH INDIVIDUAL PLANT DENSITY OF 70 PERCENT OF PRE-DISTURBANCE LEVELS ESTABLISHED OR EQUIVALENT PERMANENT ALTERNATIVE STABILIZATION METHOD IS IMPLEMENTED. ALL TEMPORARY SEDIMENT AND EROSION CONTROL MEASURES SHALL BE REMOVED UPON FINAL STABILIZATION AND BEFORE PERMIT CLOSURE.

9 ALL PERMANENT STORMWATER MANAGEMENT FACILITIES SHALL BE INSTALLED AS DESIGNED IN THE APPROVED PLANS. ANY PROPOSED CHANGES THAT AFFECT THE DESIGN OR FUNCTION OF PERMANENT STORMWATER MANAGEMENT STRUCTURES MUST BE APPROVED BY THE ECM ADMINISTRATOR PRIOR TO IMPLEMENTATION.

10 EARTH DISTURBANCES SHALL BE CONDUCTED IN SUCH A MANNER SO AS TO EFFECTIVELY MINIMIZE ACCELERATED SOIL EROSION AND RESULTING SEDIMENTATION. ALL DISTURBANCES SHALL BE DESIGNED, CONSTRUCTED, AND COMPLETED SO THAT THE EXPOSED AREA OF ANY DISTURBED LAND SHALL BE LIMITED TO THE SHORTEST PRACTICAL PERIOD OF TIME. PRE-EXISTING VEGETATION SHALL BE PROTECTED AND MAINTAINED WITHIN 50 HORIZONTAL FEET OF WATERS OF THE STATE UNLESS SHOWN TO BE INFEASIBLE AND SPECIFICALLY REQUESTED AND APPROVED.

11 COMPACTION OF SOIL MUST BE PREVENTED IN AREAS DESIGNATED FOR INFILTRATION CONTROL MEASURES OR WHERE FINAL STABILIZATION WILL BE ACHIEVED BY VEGETATIVE COVER. AREAS DESIGNATED FOR INFILTRATION CONTROL MEASURES SHALL ALSO BE PROTECTED FROM SEDIMENTATION DURING CONSTRUCTION UNTIL FINAL STABILIZATION IS ACHIEVED. IF COMPACTION PREVENTION IS NOT FEASIBLE DUE TO SITE CONSTRAINTS, ALL AREAS DESIGNATED FOR INFILTRATION AND VEGETATION CONTROL MEASURES MUST BE LOOSENED PRIOR TO INSTALLATION OF THE CONTROL MEASURE(S).

12 ANY TEMPORARY OR PERMANENT FACILITY DESIGNED AND CONSTRUCTED FOR THE CONVEYANCE OF STORMWATER AROUND, THROUGH, OR FROM THE EARTH DISTURBANCE AREA SHALL BE A STABILIZED CONVEYANCE DESIGNED TO MINIMIZE EROSION AND THE DISCHARGE OF SEDIMENT OFF-SITE.

13 CONCRETE WASH WATER SHALL BE CONTAINED AND DISPOSED OF IN ACCORDANCE WITH THE SWMP. NO WASH WATER SHALL BE DISCHARGED TO OR ALLOWED TO ENTER STATE WATERS, INCLUDING ANY SURFACE OR SUBSURFACE STORM DRAINAGE SYSTEM OR FACILITIES. CONCRETE WASHOUTS SHALL NOT BE LOCATED IN AN AREA WHERE SHALLOW GROUNDWATER MAY BE PRESENT, OR WITHIN 50 FEET OF A SURFACE WATER BODY, CREEK OR STREAM.

14 DURING DEWATERING OPERATIONS, UNCONTAMINATED GROUNDWATER MAY BE DISCHARGED ON-SITE, BUT SHALL NOT LEAVE THE SITE IN THE FORM OF SURFACE RUNOFF UNLESS AN APPROVED STATE DEWATERING PERMIT IS IN PLACE.

15 EROSION CONTROL BLANKETING OR OTHER PROTECTIVE COVERING SHALL BE USED ON SLOPES STEEPER THAN 3:1.

16 CONTRACTOR SHALL BE RESPONSIBLE FOR THE REMOVAL OF ALL WASTES FROM THE CONSTRUCTION SITE FOR DISPOSAL IN ACCORDANCE WITH LOCAL AND STATE REGULATORY REQUIREMENTS. NO CONSTRUCTION DEBRIS, TREE SLASH, BUILDING MATERIAL WASTES OR UNUSED BUILDING MATERIALS SHALL BE BURIED, DUMPED, OR DISCHARGED AT THE SITE.

17 WASTE MATERIALS SHALL NOT BE TEMPORARILY PLACED OR STORED IN THE STREET, ALLEY, OR OTHER PUBLIC WAY, UNLESS IN ACCORDANCE WITH AN APPROVED TRAFFIC CONTROL PLAN. CONTROL MEASURES MAY BE REQUIRED BY EL PASO COUNTY ENGINEERING IF DEEMED NECESSARY, BASED ON SPECIFIC CONDITIONS AND CIRCUMSTANCES.

18 TRACKING OF SOILS AND CONSTRUCTION DEBRIS OFF-SITE SHALL BE MINIMIZED. MATERIALS TRACKED OFF-SITE SHALL BE CLEANED UP AND PROPERLY DISPOSED OF IMMEDIATELY.

19 THE OWNER/DEVELOPER SHALL BE RESPONSIBLE FOR THE REMOVAL OF ALL CONSTRUCTION DEBRIS, DIRT, TRASH, ROCK, SEDIMENT, SOIL, AND SAND THAT MAY ACCUMULATE IN ROADS, STORM DRAINS AND OTHER DRAINAGE CONVEYANCE SYSTEMS AND STORMWATER APPURTENANCES AS A RESULT OF SITE DEVELOPMENT.

20 THE QUANTITY OF MATERIALS STORED ON THE PROJECT SITE SHALL BE LIMITED, AS MUCH AS PRACTICAL, TO THAT QUANTITY REQUIRED TO PERFORM THE WORK IN AN ORDERLY SEQUENCE. ALL MATERIALS STORED ON-SITE SHALL BE STORED IN A NEAT, ORDERLY MANNER, IN THEIR ORIGINAL CONTAINERS, WITH ORIGINAL MANUFACTURER'S LABELS.

21 NO CHEMICAL(S) HAVING THE POTENTIAL TO BE RELEASED IN THE STORMWATER ARE TO BE STORED OR USED ON-SITE UNLESS PERMISSION FOR THE USE OF SUCH CHEMICAL(S) IS GRANTED IN WRITING BY THE ECM ADMINISTRATOR. IN GRANTING APPROVAL FOR THE USE OF SUCH CHEMICAL(S), SPECIAL CONDITIONS AND MONITORING MAY BE REQUIRED.

22 BULK STORAGE OF ALLOWED PETROLEUM PRODUCTS OR OTHER ALLOWED LIQUID CHEMICALS IN EXCESS OF 55 GALLONS SHALL REQUIRE ADEQUATE SECONDARY CONTAINMENT PROTECTION TO CONTAIN ALL SPILLS ON-SITE AND TO PREVENT ANY SPILLED MATERIALS FROM ENTERING STATE WATERS, ANY SURFACE OR SUBSURFACE STORM DRAINAGE SYSTEM OR OTHER FACILITIES.

23 NO PERSON SHALL CAUSE THE IMPEDIMENT OF STORMWATER FLOW IN THE CURB AND GUTTER OR DITCH EXCEPT WITH APPROVED SEDIMENT CONTROL MEASURES.

24 OWNER/DEVELOPER AND THEIR AGENTS SHALL COMPLY WITH THE 'COLORADO WATER QUALITY CONTROL ACT' (TITLE 25, ARTICLE 8, CRS), AND THE 'CLEAN WATER ACT' (33 USC 1344), IN ADDITION TO THE REQUIREMENTS OF THE LAND DEVELOPMENT CODE, DCM VOLUME II AND THE ECM APPENDIX I. ALL APPROPRIATE PERMITS MUST BE OBTAINED BY THE CONTRACTOR PRIOR TO CONSTRUCTION (1041, NPDES, FLOODPLAIN, 404, FUGITIVE DUST, ETC.). IN THE EVENT OF CONFLICTS BETWEEN THESE REQUIREMENTS AND OTHER LAWS, RULES, OR REGULATIONS OF OTHER FEDERAL, STATE, LOCAL, OR COUNTY AGENCIES, THE MOST RESTRICTIVE LAWS, RULES, OR REGULATIONS SHALL APPLY.

25 ALL CONSTRUCTION TRAFFIC MUST ENTER/EXIT THE SITE ONLY AT APPROVED CONSTRUCTION ACCESS POINTS.

26 PRIOR TO CONSTRUCTION THE PERMITTEE SHALL VERIFY THE LOCATION OF EXISTING UTILITIES.

27 A WATER SOURCE SHALL BE AVAILABLE ON-SITE DURING EARTHWORK OPERATIONS AND SHALL BE UTILIZED AS REQUIRED TO MINIMIZE DUST FROM EARTHWORK EQUIPMENT AND WIND.

28 THE SOILS REPORT FOR THIS SITE HAS BEEN PREPARED AND APPROVED BY LADD ENGINEERING, DATED JULY 2000, AND SHALL BE CONSIDERED A PART OF THESE PLANS.

29 AT LEAST TEN (10) DAYS PRIOR TO THE ANTICIPATED START OF CONSTRUCTION, FOR PROJECTS THAT WILL DISTURB ONE (1) ACRE OR MORE, THE OWNER OR OPERATOR OF CONSTRUCTION ACTIVITY SHALL SUBMIT A PERMIT APPLICATION FOR STORMWATER DISCHARGE TO THE COLORADO DEPARTMENT OF PUBLIC HEALTH AND ENVIRONMENT, WATER QUALITY DIVISION. THE APPLICATION CONTAINS CERTIFICATION OF COMPLETION OF A STORMWATER MANAGEMENT PLAN (SWMP), OF WHICH THIS GRADING AND EROSION CONTROL PLAN MAY BE A PART. FOR INFORMATION OR APPLICATION MATERIALS CONTACT:

COLORADO DEPARTMENT OF PUBLIC HEALTH AND ENVIRONMENT
WATER QUALITY CONTROL DIVISION
WQCD - PERMITS

4300 CHERRY CREEK DRIVE SOUTH
DENVER, CO 80246-1530
ATTN: PERMITS UNIT

STORMWATER/BMP NOTES

30 AT ALL TIMES DURING THE CONSTRUCTION OF THE PROJECT, EROSION AND SEDIMENT CONTROL SYSTEMS SHALL BE MAINTAINED TO PREVENT DAMAGING FLOWS ON THE SITE AND IN THE RECEIVING WATERS BELOW THE SITE. CONTROL MEASURES SHALL BE INSTALLED PRIOR TO THE STRIPPING OF NATIVE VEGETATIVE COVER.

31 THE CONTRACTOR SHALL LIMIT CONSTRUCTION ACTIVITIES TO THOSE AREAS WITHIN THE LIMITS OF DISTURBANCE AND/OR TOES OF SLOPE AS SHOWN ON THE PLANS. ANY DISTURBANCE BEYOND THESE LIMITS SHALL BE RESTORED TO ORIGINAL CONDITIONS AT THE CONTRACTORS EXPENSE. CONSTRUCTION ACTIVITIES, IN ADDITION TO NORMAL CONSTRUCTION PROCEDURES, SHALL INCLUDE PARKING OF VEHICLES OR EQUIPMENT, DISPOSAL OF LITTER AND ANY OTHER ACTION WHICH WOULD ALTER EXISTING CONDITIONS.

32 TRACKING OF SOILS AND CONSTRUCTION DEBRIS FROM THE PROJECT SITE SHALL BE MINIMIZED. MATERIALS TRACKED BEYOND THE PROJECT AREA AND ONTO THE ROADWAY SHALL BE CLEANED UP DAILY AND DISPOSED OF PROPERLY. CLEANUP EFFORTS SHALL BE INCLUDED IN THE COST OF THE WORK.

33 THE MINIMUM THICKNESS OF THE TOPSOIL SHALL BE 4 INCHES. THE TOPSOIL SHALL BE APPLIED TO ALL DISTURBED SURFACES, OR AS DIRECTED BY THE ENGINEER.

34 IF CONCRETE TRUCKS ARE TO BE WASHED ONSITE, A TEMPORARY CONCRETE WASHOUT FACILITY SHALL BE CONSTRUCTED AND MAINTAINED WITH SUFFICIENT SIZE TO CONTAIN ALL LIQUID AND CONCRETE WASTE GENERATED BY WASHOUT OPERATIONS. CONCRETE WASHOUT AREAS SHALL BE LOCATED AT LEAST 50 HORIZONTAL FEET FROM STORM DRAINS AND WATERWAYS.

35 ALL EXISTING AREAS DISTURBED BY CONSTRUCTION ACTIVITIES SHALL BE REVEGETATED USING THE SEED MIX LISTED IN THE TABLE BELOW. SEED SHALL BE HAND BROADCAST AT THE RATE OF 52 LBS OF PURE LIVE SEED (PLS) PER ACRE. ALL SEEDED AREAS SHALL BE COVERED WITH SOIL RETENTION BLANKET.

ADDITIONAL NOTES:

STAGING AREA TO BE DETERMINED BY CONTRACTOR IN THE FIELD. THE LOCATIONS SHALL BE DELINEATED ON THIS PLAN BY THE CONTRACTOR.
THE EROSION CONTROL DELINEATED ON THIS PLAN SHALL BE REGULARLY UPDATED BY THE CONTRACTOR.
TEMPORARY SEDIMENT TRAP LOCATIONS WILL BE DETERMINED BY THE CONTRACTOR IN THE FIELD.
THERE ARE NO BATCH PLANTS ON SITE.
AREAS LEFT OPEN FOR 21 DAYS OR MORE, OTHER THAN FOR UTILITY AND DRAINAGE CONSTRUCTION SHALL BE SEEDED AND/OR MULCHED.
NO PORTION OF THIS PROPERTY IS LOCATED WITHIN A DESIGNATED F.E.M.A. FLOODPLAIN AS DETERMINED BY THE FEDERAL EMERGENCY MANAGEMENT AGENCY (FEMA) FLOOD INSURANCE RATE MAP (FIRM) PANEL NO. 08041C0535G, EFFECTIVE DATE DECEMBER 7, 2018.

EXISTING VEGETATION:

VEGETATION CONSISTS OF NATIVE GRASSES WITH NO TREES ONSITE. EXISTING VEGETATION PERCENT COVER IS APPROXIMATELY 70%

CDOT MIX

COMMON NAME	BOTANICAL NAME	PLS LBS/ACRE
BLUE GRAMA	BOUTELOUA GRACILIS V. HACHITA	2
WESTERN WHEATGRASS	PASCOPYRUM SMITHII V. ARRIBA	6
SIDEOATS GRAMA	BOUTELOUA CURTIPENDULA V. VAUGHN	3
LITTLE BLUESTEM	SCHIZACHYRIUM SCOPARIUM 'PASTURA'	3
GREEN NEEDLEGRASS	STIPA VIRIDULA V. LORDOM	3
SWITCHGRASS	PANICUM VIRGATUM 'DACOTAH'	4
JUNEGRASS	KOELERIA MACRANTHA	0.2
PRAIRIE CONEFLOWER	RATIBIDA COLUMNIFERA	0.3
PURPLE PRAIRIE CLOVER	RATIBIDA COLUMNARIS	0.5
GAILLARDIA	GAILLARDIA ARISTATA	1
OATS	AVENA SATIVA	3
TOTAL POUNDS OF PURE LIVE SEED (PLS) LBS PER ACRE		26

NOTE: SMALL AREAS THAT REQUIRE HAND BROADCAST SEEDING AND MULCHING SHALL BE SEEDED AT TWICE THESE RATES.

Computer File Information			
Creation Date:	2/3/2021	Initials:	JT
Last Modification Date:	7/18/2022	Initials:	DAN
Full Path:	P:_ENGINEERING_Projects\TANAGER WAY - 2015 Disaster_362483\CONTRACT\Fence - IFB\CADD\Drawings		
Drawing File Name:	TanagerCover - SWMP-GenNote		
Acad. Ver. Civ3D 2018	Scale: n/a	Units:	n/a

Index of Revisions		
R-		
R-		
R-		
R-		
R-		

El Paso County
Department of Public Works
3275 Akers Drive
Colorado Springs, Colorado 80922-1547
Ph: 719-520-6460 Fax: 719-520-6878
Division of Transportation

As Constructed	Tanager SWMP	Project No./Code
No Revisions:	SWMP-General Notes	362483
Revised:	Designer: OAL / Detailer: DAN / Structure Numbers	
Void:	Sheet Subset: / Subset Sheets: of	Sheet Number 7

P:_ENGINEERING_Projects\TANAGER WAY - 2015 Disaster_362483\CONTRACT\Fence - IFB\CADD\Drawings\Tanager Fence Plan.dwg, Erosion Ctrl, 7/18/2022 7:20:38 AM, dotnorton, Supersedes All Previously Dated

CALL UTILITY NOTIFICATION CENTER OF COLORADO 811

CALL 3 BUSINESS DAYS IN ADVANCE BEFORE YOU DIG, GRADE, OR EXCAVATE FOR THE MARKING OF UNDERGROUND MEMBER UTILITIES.

811 Know what's below. Call before you dig.

LEGEND

- EXISTING TELEPHONE RISER . . . TR
- EXISTING ELECTRIC VAULT . . . . EV
- EXISTING MANHOLE . . . . . Ⓢ
- EXISTING FENCE LINE . . . X X
- NEW FENCE LINE . . . . . .
- FOUND SURVEY POINT . . . . . .
- TO BE SET SURVEY . . . . . .
- EROSION CONTROL LOGS . . .
- LIMITS CONST. AREA . . . LOA LOA LOA
- VTP VEHICLE TRACKING PAD
- CWS CONCRETE WASHOUT STRUCTURE
- FEMA Floodplain 100 Yr AE
- FEMA Floodplain 500 Year

FEMA FLOODOPLAIN AREA 500 YEAR

VTC INITIAL AND INTERIM

FEMA FLOODOPLAIN AREA 100 YEAR AE

CONCRETE WASHOUT INITIAL AND INTERIM

EROSION CONTROL LOG

LIMITS OF CONTRUCTION AREA

EROSION CONTROL LOGS (TYP.)

NEW FENCE

NEW GATE (TYP.)

REC. NO. 97042260

REC. NO. 203173718

REC. NO. 212070539

1737-1785A B Street
1 Story Concrete Block
Commercial Building

1803 B Street

1807 B Street

1811 B Street

1825 B St.

4075 Chamberlain South
1 Story Brick Office
Building

CREEK

BOOK 193

BID SET 7/18/22

P:_ENGINEERING_Projects\TANAGER WAY - 2015 Disaster_362483\CONTRACT\Fence - IFB\CADD\Drawings\Tanager Fence Plan.dwg

Computer File Information			
Creation Date:	12/30/2019	Initials:	JT
Last Modification Date:	7/18/22	Initials:	DAN
Full Path:	\TANAGER WAY-2015 Disaster_362483\CONTRACT\Fence-IFB\CADD\Drawings		
Drawing File Name:	Tanager Fence Plan.dwg – Sht01		
Acad. Ver. Civ3D 2016 Scale:	1"=50'	Units:	Feet

Index of Revisions		
R–		
R–		
R–		
R–		
R–		

El Paso County
Department of Public Works
3275 Akers Drive
Colorado Springs, Colorado 80922–1547
Ph: 719–520–6460 Fax: 719–520–6878
Division of Transportation

As Constructed
No Revisions:
Revised:
Void:

Tanager Fence Plan
Erosion Control Plan

Designer: JT
Detailer: JT
SheetSubset:
Structure Numbers
Subset Sheets: 1 of

Project No./Code
362483

Sheet Number 8

CALL UTILITY NOTIFICATION CENTER OF COLORADO 811
CALL 3 BUSINESS DAYS IN ADVANCE BEFORE YOU DIG, GRADE OR EXCAVATE FOR THE MARKING OF UNDERGROUND MEMBER UTILITIES.
Know what's below. Call before you dig.

P:_ENGINEERING_Projects\TANAGER WAY - 2015 Disaster_362483\CONTRACT\Fence - IFB\CADD\Drawings\SWMP-a.dwg, SW1, 7/18/2022 7:20:40 AM, dotnorton, Supersedes All Previously Dated Sets

BID SET 1/4/22

SWMP TEMPLATE (PLAN SHEETS) FOR PROJECTS WITH LESS THAN 1 ACRE OF DISTURBANCE (6/28/2021)

1. SITE DESCRIPTION

The Contractor shall comply with all CDOT contractual requirements. The SWMP Administrator for Construction shall update to reflect current project site conditions.

A. PROJECT SITE LOCATION: The Project is located southeast of the intersection of B Street and Chamberlin South and along Tanager Way, approximately 1 mile north of Fort Carson Gate 20 in Southeast Colorado Springs, CO.

B. PROJECT SITE DESCRIPTION:

The Project consists of installing approximately 1,900 feet of chain link fence along the right-of-way boundary of Clover ditch to help mitigate illicit dumping in the project area. Construction activities include clearing and grubbing, tree trimming, excavation for fence posts, and fence installation.

Construction Schedule: The proposed project will begin in Fall 2021 with final stabilization anticipated in Spring 2022. The general sequence of the phasing of the related construction activities is provided in Section 8, below.

C. PROPOSED SEQUENCING FOR MAJOR CONSTRUCTION ACTIVITIES: Clearing, tree trimming / removal, fence post excavation, concrete pour, fence installation.

D. ACRES OF DISTURBANCE:

1. Total area of construction site (LOC (PERMITED AREA)): 4.5 acres
2. Total area of proposed disturbance (LDA): 0.01 acres
3. Total area of seeding: 0.5 acres
4. Total area of impervious surface: 0 acres
5. Total area of NEW impervious surface: 0.01 acres

E. EXISTING SOIL DATA: Existing soils consist of Hydrologic Group D soils (clayey slope alluvium). Soils in this group have high runoff potential when thoroughly wet. Water movement through the soil is restricted or very restricted.

Data Source(s): Colorado Geological Survey Geologic Map of the Colorado Springs Quadrangle

F. EXISTING VEGETATION, INCLUDING PERCENT OF VEGETATIVE COVER: During design, the SWMP Administrator for Design in consultation with the Engineer will determine if the SWMP Administrator for Design or the SWMP Administrator for Construction will conduct the Vegetation Transects. If the site is disturbed, an Adequate Reference Site(s) may be utilized, refer to the permit.

Pre-Construction: Date of survey: _____ Percent Vegetative Cover: _____
Description of existing vegetation: _____
Method for determining percent vegetative cover: _____

Include a map or table showing transect locations, photos documenting pre-Construction vegetative cover, and methodology used to determine existing vegetative cover to SWMP.

Post-Construction: Date of survey: _____ Percent Vegetative Cover: _____
Description of vegetation: _____
The method used to determine pre-construction percent cover shall be used to determine post construction percent cover: _____

Include map or table showing transect locations, photos documenting post-Construction vegetative cover, and methodology used to determine existing vegetative cover to SWMP

G. ULTIMATE RECEIVING WATERS: Clover Ditch crosses through the Site. The Site will ultimately discharge into Fountain Creek.

H. ALLOWABLE NON-STORMWATER DISCHARGES: There will be a concrete washout area (CWA) where the cleaning of concrete trucks could produce a non-stormwater discharge. Proper installation and maintenance of the CWA will not allow runoff from this area. No other non-stormwater discharge is anticipated at the Site.

2. STORMWATER MANAGEMENT CONTROLS FOR FIRST CONSTRUCTION ACTIVITIES

THE CONTRACTOR SHALL PERFORM THE FOLLOWING:

A. POTENTIAL POLLUTANT SOURCES

1. Evaluation of general sediment and non-sediment pollution sources associated with Site construction activities consist of the following:
   - Disturbed and Stored Soils – Earth disturbing activities (grading, excavation, etc.) will be necessary for this Project; therefore, the potential exists for disturbed site soils to contribute sediment to stormwater discharges.
   - Vehicle Tracking and Sediment – Construction traffic will be entering and exiting the Site; therefore, the potential exists for vehicle tracking to contribute sediment to stormwater discharges.
   - Management of Contaminated Soils – Contaminated soils are not anticipated on this Site. If encountered, the SWMP Administrator shall take appropriate containment and treatment measures.
   - Outdoor Storage of Materials – Limited outdoor storage of materials is anticipated with construction of this Site; however, outdoor storage of chemicals, fertilizers, etc. is not anticipated.
   - Vehicle and Equipment Maintenance and Fueling – Routine maintenance and fueling of vehicles and equipment is not anticipated at the Site. If encountered, the SWMP Administrator shall take appropriate containment and treatment measures.
   - Onsite Waste Management – Waste management consisting of solid waste piles, liquid wastes, dumpsters, etc. are anticipated onsite; therefore, the potential exists for these operations to introduce sediment and non-sediment pollutants to stormwater discharges.
   - Concrete Truck / Equipment Washing – Concrete truck and equipment washing are anticipated with this Project. The SWMP Administrator shall take appropriate containment and treatment measures.
   - Dedicated Asphalt and Concrete Batch Plants – Dedicated asphalt and/or concrete batch plants are not anticipated with this Project. If encountered, the SWMP Administrator shall take appropriate containment and treatment measures and document as necessary.
   - Non-Industrial Waste Sources – Non-Industrial waste sources limited to portable sanitary facilities are anticipated with this Project.
   - Additional Pollutant Sources – Additional areas or procedures where potential spills could occur are discussed in Section 4a.

B. OFFSITE DRAINAGE (RUN ON WATER)

1. Place Control Measures such as sediment control logs (SCL) to address run-on water in accordance with subsection 208.03.

C. CONSTRUCTION DEWATERING:

1. Construction dewatering is not anticipated for this Site. If dewatering is necessary, the SWMP Administrator shall obtain a CDPS Dewatering Permit from CDPHE if conditions of their Low Risk Guidance for Discharges of Uncontaminated Groundwater to Land are not met; see subsections 107.02 and 107.25.

   Refer to CDPHE Low Risk Discharge Guidance Document of Uncontaminated Groundwater to Land. https://www.colorado.gov/pacific/sites/default/files/WQ%20LOW%20RISK%20GW.pdf

D. VEHICLE TRACKING CONTROL

1. One construction entrance with vehicle tracking control (VTC) shall be implemented to reduce off-site sediment tracking. Control Measures shall be implemented in accordance with subsection 208.04.

E. PERIMETER CONTROL

1. Perimeter control shall be established as the first item on the SWMP to prevent the potential for pollutants leaving the construction site boundaries, entering the stormwater drainage system, or discharging to state waters. Perimeter controls at the Site will consist of sediment control logs (SGL).

3. QUALIFIED STORMWATER MANAGERS:

Template Revised: 2/x/2021

Computer File Information			Index of Revisions		
Creation Date: 1/4/2022	Initials: DET	(R–)			
Last Modification Date: 1/4/2022	Initials: DET	(R–)			
Full Path: P:_ENGINEERING_Projects\TANAGER WAY - 2015 Disaster_362483\CONTRACT\Fence - IFB\CADD\Drawings		(R–)			
Drawing File Name: SWMP–a – SW1		(R–)			
Acad. Ver. Civ3D 2020 Scale: 1" = 1'	Units: Feet	(R–)			

El Paso County Department of Public Works
3275 Akers Drive
Colorado Springs, Colorado 80922–1547
Ph: 719–520–6460 Fax: 719–520–6878
Division of Transportation

As Constructed	Tanager SWMP Stormwater Mgmt Plan			Project No./Code
No Revisions:				362483
Revised:	Designer: ENG	Structure Numbers		
Void:	Detailer: DET			Sheet Number 9
	SheetSubset:	Subset Sheets: of		

CALL UTILITY NOTIFICATION CENTER OF COLORADO 811
CALL 3 BUSINESS DAYS IN ADVANCE BEFORE YOU DIG, GRADE OR EXCAVATE FOR THE MARKING OF UNDERGROUND MEMBER UTILITIES.
Know what's below. Call before you dig.

A. SWMP ADMINISTRATOR FOR DESIGN: CDOT Certified Individual responsible for developing SWMP Plan Sheets and SWMP Site Maps during the design phase. https://www.codot.gov/programs/environmental/landscape-architecture/207-and-212-psp-required-swmp-development-tools-1]

Name/Title	Contact Information	Certification #
Omar Lopez, P.E.	719-216-1696 OmarLopez@elpasoco.com	

B. SWMP ADMINISTRATOR FOR CONSTRUCTION: (As defined in Subsection 208) The Contractor shall designate a SWMP Administrator for Construction. The SWMP Administrator for Construction shall become the operator for the SWMP and assume responsibility for all design changes to the SWMP implementation and maintenance in accordance to 208.03, the SWMP shall remain the property of CDOT. The SWMP Administrator for Construction shall be responsible for implementing, maintaining and revising SWMP, including the title and contact information. The activities and responsibilities of the SWMP Administrator for Construction shall address all aspects of the project's SWMP. (Update the information below for each new SWMP Administrator for Construction) (Copy of TECS Certification must also be included in the SWMP.)

Name/Title	Contact Information (phone & email)	TECS Certification #	Start Date	Engineer Approval

C. PERMANENT STABILIZATION SUBJECT MATTER EXPERT: This qualified individual will be either a Regional Environmental Staff member, or an Independent Contractor Controller (Independent Assurance Program). This expert is a project team leader responsible for ensuring project adherence to requirements of the 207 and 212 Project Special Provisions as follows, and will be available for questions regarding permanent stabilization requirements. https://www.codot.gov/programs/environmental/assets/construction-phase-inspection-and-verification-checklist-for-successful-roadside-revegetation

1. Review the Topsoil Management Plan and the Permanent Stabilization Site Maps.
2. Attend the Environmental Pre-construction Conference.
3. Coordinate the Site Pre-vegetation Conference.
4. Review and recommend approval of products.
5. Review and recommend approval of the Quantities Verification Prerequisite.
6. Attend the Substantial Landscape Completion Walkthrough.
7. Attend the Final Landscape Completion Walkthrough.

Name/Title	Contact Information [phone & email]

4. DURING CONSTRUCTION

The SWMP should be considered a "living document" that is continuously reviewed and modified. During construction, the following items shall be added, updated, or amended as needed by the Contractor in accordance with Section 208

A. MATERIALS HANDLING AND SPILL PREVENTION: prior to construction commencing the Contractor shall submit a Spill Prevention, Control and Countermeasure Plan, see subsection 208.06. Materials handling shall be in accordance with subsection 208.06.

B. OTHER CDPS PERMITS: No other CDPS Permits are anticipated for the Site.

C. STOCKPILE MANAGEMENT: Temporary Soil Stockpiles shall be protected from stormwater using Sediment Control Logs (SCL) or other perimeter control to inhibit soil transport as well as at material storage areas. Stockpile management shall be done in accordance with subsections 107.25 and 208.07

D. CONCRETE WASHOUT: Concrete waste is anticipated with this Project; and therefore, a dedicated concrete washout is required. The concrete washout location shall be not be located in an area where shallow groundwater may be present and would result in buffering capacity not being adequate, such as near natural drainages, springs, or wetlands. Concrete wash out water or waste from field laboratories and paving equipment shall be contained in accordance with subsection 208.05.

E. STREET SWEEPING: Paved and impervious surfaces which are adjacent to construction sites must be swept on a daily basis and as needed during the day when sediment and other materials are tracked or discharged onto them. Either sweeping by hand or use of street sweepers is acceptable. Street sweepers using water while sweeping is preferred in order to minimize dust. Flushing off paved surfaces with water is prohibited. Street sweeping shall be done in accordance with subsection 208.04.

F. PORTABLE TOILETS: Portable toilets shall be provided on-site as necessary for construction personnel. Portable toilets shall be located on flat surfaces away from drainage paths, tied-down or staked-down, emptied regularly, and where possible secondary containment pans shall be provided under the portable toilets. Portable toilets will be located a minimum of 10 feet from stormwater inlets and 50 feet from state waters. They will be secured at all four corners to prevent overturning and cleaned on a weekly basis. They shall be inspected daily for spills.

5. INSPECTION AND MAINTENANCE

A. Inspections shall be the responsibility of the SWMP Administrator for Construction throughout the construction process. The SWMP Administrator shall inspect BMPs once every 14 days at a minimum, and immediately (within 24 hours) after any precipitation or snowmelt event that causes surface erosion (i.e. that results in storm water running across the ground), to ensure that BMPs are maintained in effective operating condition.

B. The inspection shall include observations of:
- The Construction Site Perimeter and Discharge Points
- All Disturbed Areas
- Vehicles and Equipment
- Areas Used for Material / Waste Storage That are Exposed to Precipitation
- Other Areas Determined to Have a Significant Potential for Stormwater Pollution
- Erosion and Sediment Control Measures Identified in the SWMP
- Any Other Structural Control Measures That May Require Maintenance

The inspection must determine if there is evidence of, or the potential for, pollutants entering the drainage system. Control measures should be reviewed to determine if they still meet the design intent and operational criteria in the SWMP and if they continue to adequately control pollutants at the site. Any control measures not operating in accordance with the SWMP must be addressed as soon as possible, immediately in most cases, to minimize the discharge of pollutants and the SWMP must be updated and inspections must be documented.

C. BMP Maintenance / Replacement and Failed BMPs: The contractor shall remove sediment that has been collected by perimeter controls, such as silt fence and sediment control logs, on a regular basis to prevent failure of BMPs, and remove potential of sediment from being discharged from the site in the event of BMP failure. Removed sediment must be moved to an appropriate location where it will not become an additional pollutant source and should never be placed in ditches or streams. Maintenance shall be in accordance with subsection 208.04 (f).

D. The contractor shall update the GEC as required with any new BMPs added during the construction period.

E. Record Keeping and Documenting Inspections: The contractor shall maintain records of all inspection reports, including signed inspection logs, at the project site.

6. INTERIM AND PERMANENT STABILIZATION

The Contractor shall comply with all interim stabilization and permanent stabilization requirements in accordance with subsection 208.04(e).

A. SEEDING PLAN

The following seed mix(es) and rates are for drill seeding method as shown on the Permanent Stabilization Site Maps shall be used:

COMMON NAME	BOTANICAL NAME	LBS. PLS PER ACRE
BLUE GRAMA	BOUTELOUA GRACILIS V. HACHITA	2
WESTERN WHEATGRASS	PACOPYRUM SMITHII V. ARRIBA	6
SIDEOATS GRAMA	BOUTELOUA CURTIPENDULA V. VAUGHN	3

Template Revised: 2/x/2021

BID SET 1/4/22

Computer File Information			Index of Revisions		
Creation Date: 1/4/2022	Initials: DET	R–			
Last Modification Date: 1/4/2022	Initials: DET	R–			
Full Path: P:_ENGINEERING_Projects\TANAGER WAY - 2015 Disaster_362483\CONTRACT\Fence - IFB\CADD\Drawings		R–			
Drawing File Name: SWMP–a – SW2		R–			
Acad. Ver. Civ3D 2020 Scale: 1" = 1'	Units: Feet	R–			

El Paso County
Department of Public Works
3275 Akers Drive
Colorado Springs, Colorado 80922–1547
Ph: 719–520–6460 Fax: 719–520–6878
Division of Transportation

As Constructed	Tanager SWMP Stormwater Mgmt Plan	Project No./Code
No Revisions:		362483
Revised:	Designer: ENG / Detailer: DET / SheetSubset:	Structure Numbers
Void:	Subset Sheets: of	Sheet Number 10

P:_ENGINEERING_Projects\TANAGER WAY - 2015 Disaster_362483\CONTRACT\Fence - IFB\CADD\Drawings\SWMP-a.dwg, SW2, 7/18/2022 7:20:42 AM, dotnorton, Supersedes All Previously Dated Sets

CALL UTILITY NOTIFICATION CENTER OF COLORADO 811
CALL 3 BUSINESS DAYS IN ADVANCE BEFORE YOU DIG, GRADE OR EXCAVATE FOR THE MARKING OF UNDERGROUND MEMBER UTILITIES.
811 Know what's below. Call before you dig.

LITTLE BLUESTEM	SCHIZACHYRIUM SCOPARIUM 'PASTURA'	3
GREEN NEEDLEGRASS	STIPA VIRIDULA V. LORDOM	3
SWITCHGRASS	PANICUM VIRGATUM 'DACOTAH'	4
JUNEGRASS	KOELERIA MACRANTHA	0.2
PRAIRIE CONEFLOWER	RATIBIDA COLUMNIFERA	0.3
PURPLE PRAIRIE CLOVER	RATIBIDA COLUMNARIS	0.2
GAILLARDIA	GAILLARDIA ARISTATA	1
OATS	AVENA SATIVA	3
TOTAL		26

B. SEEDING APPLICATION: The following seeding methods shall be used for all areas which are not surfaced and as shown on the Permanent Stabilization Site Maps. Soil compaction shall be minimized for areas where permanent stabilization will be achieved through vegetative cover.

SEEDING METHOD (subsection 212.05)	ACRE
Seeding (Native) Drill, CDOT Pay Item 212-00706	
Seeding (Native) Hydraulic, CDOT Pay Item 212-00707	
Seeding (Native) Broadcast, CDOT Pay Item 212-00708	
Seeding (Wetland) Drill, CDOT Pay Item 212-00709	
Seeding (Wetland)Hydraulic, CDOT Pay Item 212-00710	
Seeding (Wetland) Broadcast, CDOT Pay Item 212-00711	
TOTAL	

The Contractor shall provide the location of where seed is stored and access to stored seed locations to the Engineer. Seed stored by the Contractor for longer than 30 days will be rejected.

C. MULCHING APPLICATION: Apply a minimum of 2 tons of certified weed free hay or 2 1/2 tons of certified weed free straw per acre and in accordance with Section 213, and mechanically crimp it into the soil in combination with an organic mulch tackifier.

1. Prior to winter shutdown or the summer seeding window closure: Uncompleted slopes shall be mulched with 2 tons of mulching (weed free) per acre, mechanically crimped into the topsoil in combination with an organic mulch tackifier in accordance with subsections 208 and 213.

D. SPECIAL REQUIREMENTS:

1. Soil amendments, seedbed preparation, and permanent stabilization mulching shall be accomplished within four working days of placing the topsoil on the de-compacted civil subgrades. If placed topsoil is not mulched with permanent stabilization mulch within four working days, the Contractor shall complete interim stabilization methods in accordance with subsection 208.04(e) at no additional cost to the Department.
2. Permanent stabilization mulching shall be accomplished within 24 hours of hydraulic application of native seed.
3. The Contractor shall submit a proposed Permanent Stabilization Phasing Plan to the Engineer for approval showing how the SWMP Permanent Stabilization Plans will be implemented to minimize damage to seeded areas.

E. SOIL AMENDMENT REQUIREMENTS: Minimum amendment material requirements for all disturbances to receive seeding (native).

Total Acres of Seeding (Native) Drill

Seeding (Native) Drill Pay Item 212-00706	Pay Item Description	Amount/Acre	Units	Total For This Method
	212-00700 Organic Fertilizer		Pounds	
	212-00701 Compost (Mechanically Applied)		CY	
	212-00703 Humate		Pounds	
	212-00704 Mycorrhizae		Pounds	
	212-00705 Elemental Sulfur		Pounds	

Total Acres of Seeding (Native) Hydraulic

Seeding (Native) Hydraulic Pay Item 212-00707	Pay Item Description	Amount/Acre	Units	Total For This Method
	212-00700 Organic Fertilizer		Pounds	
	212-00702 Biotic Soil Amendments (Hydraulic Applied)		Pounds	
	212-00703 Humate		Pounds	
	212-00704 Mycorrhizae		Pounds	

Total Acres of Seeding (Native) Broadcast

Seeding (Native)Broadcast Pay Item 212-00708	Pay Item Description	Amount/Acre	Units	Total For This Method
	212-00700 Organic Fertilizer		Pounds	
	212-00701 Compost (Mechanically Applied)		CY	
	212-00703 Humate		Pounds	
	212-00704 Mycorrhizae		Pounds	
	212-00705 Elemental Sulfur		Pounds	

F. SOIL RETENTION COVERING: On slopes and ditches requiring a blanket or turf reinforcement mat (trm), the blanket/trm shall be placed in lieu of mulch and mulch tackifier and placed after seeding (native). See SWMP Site Map for blanket/trm locations.

G. Permanent Stabilization Application Under Structures: Under structures shade patterns should be considered and the use of Median Cover Material (Stone) or other stabilized options with an approved Project Special Provision should be used. See SWMP Site Map for locations.

H. RESEEDING OPERATIONS/CORRECTIVE STABILIZATION:

Prior to partial acceptance.

1. All seeded areas shall be reviewed by the SWMP Administrator for Construction and or Engineer for bare soils caused by surface or wind erosion. Bare areas caused by surface or gully erosion, blown away mulch, etc. shall be re-graded, seeded, and have the designated mulching applied as necessary, at no additional cost to the project.
2. The Contractor shall maintain seeding/mulch/tackifier/blanket/TRM, mow to control weeds or apply herbicide to control weeds in the seeded areas until Partial Acceptance of the stormwater construction work.

7. FINAL STABILIZATION AND LONG-TERM STORMWATER MANAGEMENT:

The final stabilization technique to be used at this project for stabilizing soils shall be to provide a protective cover of landscaping vegetation. Seeding should be conducted after final grade is achieved and soils are prepared to take advantage of soil moisture and seed germination.

Final site stabilization is achieved when vegetative cover provides permanent stabilization with a density greater than 70 percent of the pre-disturbance levels, or equivalent permanent, physical erosion reduction methods have been employed over the entire area to be stabilized by vegetative cover. Temporary erosion and sediment control measures shall be removed after final stabilization has been achieved.

This project does not rely on control measures owned or operated by another entity.

BID SET 1/4/22

Template Revised: 2/x/2021

Computer File Information			Index of Revisions			El Paso County Department of Public Works	As Constructed	Tanager SWMP Stormwater Mgmt Plan		Project No./Code
Creation Date: 1/4/2022	Initials: DET	R–				3275 Akers Drive Colorado Springs, Colorado 80922–1547 Ph: 719–520–6460 Fax: 719–520–6878	No Revisions:			362483
Last Modification Date: 1/4/2022	Initials: DET	R–					Revised:	Designer: ENG	Structure Numbers	
Full Path: P:_ENGINEERING_Projects\TANAGER WAY - 2015 Disaster_362483\CONTRACT\Fence - IFB\CADD\Drawings		R–						Detailer: DET		
Drawing File Name: SWMP–a – SW3		R–				Division of Transportation	Void:	SheetSubset:	Subset Sheets: of	Sheet Number 11
Acad. Ver. Civ3D 2020 Scale: 1" = 1'	Units: Feet	R–								

P:_ENGINEERING_Projects\TANAGER WAY - 2015 Disaster_362483\CONTRACT\Fence - IFB\CADD\Drawings\SWMP-a.dwg, SW3, 7/18/2022 7:20:45 AM, dotnorton, Supersedes All Previously Dated Sets

CALL UTILITY NOTIFICATION CENTER OF COLORADO 811
CALL 3 BUSINESS DAYS IN ADVANCE BEFORE YOU DIG, GRADE OR EXCAVATE FOR THE MARKING OF UNDERGROUND MEMBER UTILITIES.
Know what's below. Call before you dig.

P:_ENGINEERING_Projects\TANAGER WAY - 2015 Disaster_362483\CONTRACT\Fence - IFB\CADD\Drawings\SWMP-a.dwg, SW4, 7/18/2022 7:20:47 AM, dotnorton, Supersedes All Previously Dated Sets

BID SET 1/4/22

8. NARRATIVES:

Control Measure Matrixes During Construction:

1. Control measure narratives have been included for the CDOT Standard Specifications and Standard Plan M-208 and M-216 along with any non-standard control measures approved during the design process. If a Non-Standard Control Measure not included in the SWMP is proposed and approved by the Engineer the SWMP Administrator for Construction shall do the following: Place an "X" in the column for non-standard and complete a Non-Standard Control Measure Specification and Narrative covering the what, when, where and why the control measure is being used shall be add to the SWMP. The appropriate "X" shall also be added to the implementation phase(s).
2. The SWMP Administrator for Construction shall place an "X" in the column In Use On Site when the control measure has been installed.
3. A "B" in the Initial Activities Column indicates that the control measure shall be installed before construction activity starts. Locations and quantities will be discussed during the Environmental Pre-Construction Conference with the Regional Water Pollution Control Manager.

STRUCTURAL Control Measures that may be potentially used on the project for erosion and sediment control; practices may include, but are not limited to:

APPLICATION, CONTROL MEASURE	NARRATIVE	M- 208 STANDARD or "X" for NON-STANDARD	IN USE ON SITE	CONTROL MEASURE IMPLEMENTATION PHASE		
				INITIAL ACTIVITIES	INTERIM ACTIVITIES	PERMANENT STABILIZATION
PROTECTION OF EXISTING WETLANDS Fence (plastic) and erosion logs	Fence (plastic) shall be placed in combination with erosion logs to prevent encroachment of construction traffic and sediment into state waters prior to start of construction disturbances. Fence (plastic) shall be placed adjacent to the wetlands; erosion logs shall be placed between the plastic fence and disturbance area. Logs shall be placed to direct flows away from or filter water running into wetlands from disturbance areas.			X	X	
PROTECTION OF EXISTING TREES/LANDSCAPING Fence (plastic)	Fence (plastic) shall be used in areas indicated in the plans to prevent encroachment of construction traffic and sediment for the protection of mature trees and/or existing landscaping prior to start of construction disturbances.			X	X	
CHECK DAM/DITCH CHECK Erosion log, silt berm, silt dike, rock check dam	Placed in ditches immediately upon completion of ditch grading to reduce velocity of runoff in ditch. For existing ditches, place prior to start of construction disturbances.	M-208				
Storm Drain Inlet Protection In Paved Roadways (Type 1, 2 and 3 as shown on M-208-1, sheet 5 of 11)	Manufactured storm drain inlet protection placed prior to construction disturbances as detailed in M-208-1, to protect existing inlets or immediately upon completion of new inlets to prevent sediment from entering the inlet throughout construction.	M-208				
Storm Drain Inlet Protection In Native Seed Areas (M-604 Standard Inlets Type C and D)	Erosion logs or aggregate bags placed around inlet grate to prevent sediment from entering inlet. Place prior to construction disturbances to protect existing inlets or immediately upon completion of new inlets.	M-208				
CULVERT INLET/OUTLET PROTECTION Erosion logs, aggregate bags	Placed at mouth of culvert inlets and over top of culvert at inlet and outlet where disturbance may be occurring adjacent to pipe to prevent sediment laden water from entering pipe or drainage. Place prior to start of construction disturbances.	M-208				
TYPE C, TYPE D AND TYPE 13 PROTECTION Erosion logs, aggregate bags, erosion bales	Placed around inlet grate or slope and ditch paving to prevent sediment from entering inlet. Place prior to start of construction disturbances.	M-208				
STOCKPILE PROTECTION Temporary berm, erosion logs, aggregate bags*	Placed within specified distance, in accordance with subsection 208.06, from toe to contain sediment around stockpile. *Aggregate bags are easily moved and replaced for access during the work day. Place prior to start of stockpile, increase control as stockpile increases size.	M-208			X	
TOE OF FILL PROTECTION Erosion logs, temporary berm, silt fence, topsoil windrow*	Place prior to slope/embankment work to capture sediment and protect and delineate undisturbed areas. *Can be used to stockpile topsoil for salvage.	M-208				
PERIMETER CONTROL Erosion logs, silt fence, temporary berm, topsoil windrow*	Placed prior to construction commencing to address potential run-on water from off site, and to divert around disturbed area. *Can be used to stockpile topsoil for salvage.	M-208		X	X	
SEDIMENT CONTROL/ SLOPE CONTROL Silt fence, erosion logs	Placed on the contour of a slope to contain and slow down construction runoff. Place prior to start of construction disturbances.	M-208			X	
TEMPORARY SEDIMENT TRAP	Used to capture sediment laden runoff from disturbed areas < 5 acres during construction. Place prior to start of construction disturbances. Outlets that withdraw water from or near the surface may be installed when discharging from basins and impoundments.	M-208				
EMBANKMENT PROTECTION OR TEMPORARY SLOPE DRAIN	Placed as a conduit or chute to drain runoff down slope and to prevent erosion of slope.	M-208				
OUTLET PROTECTION Riprap, or approved other	Material placed as energy dissipater to prevent erosion at outlet structure.	M-601-12				

Template Revised: 2/x/2021

Computer File Information			Index of Revisions				El Paso County Department of Public Works	As Constructed	Tanager SWMP Stormwater Mgmt Plan			Project No./Code
Creation Date:	1/4/2022 Initials: DET	(R–)					3275 Akers Drive Colorado Springs, Colorado 80922–1547 Ph: 719–520–6460 Fax: 719–520–6878	No Revisions:				362483
Last Modification Date:	1/4/2022 Initials: DET	(R–)						Revised:	Designer: ENG	Structure Numbers		
Full Path:	P:_ENGINEERING_Projects\TANAGER WAY - 2015 Disaster_362483\CONTRACT\Fence - IFB\CADD\Drawings	(R–)						Void:	Detailer: DET			Sheet Number 12
Drawing File Name:	SWMP–a – SW4	(R–)					Division of Transportation		SheetSubset:	Subset Sheets: of		
Acad. Ver. Civ3D 2020 Scale:	1" = 1' Units: Feet	(R–)										

CALL UTILITY NOTIFICATION CENTER OF COLORADO
811
CALL 3 BUSINESS DAYS IN ADVANCE BEFORE YOU DIG, GRADE OR EXCAVATE FOR THE MARKING OF UNDERGROUND MEMBER UTILITIES.
Know what's below. Call before you dig.

CONCRETE WASHOUT In-ground or fabricated	Construction control, used for waste management of concrete and concrete equipment cleaning. Place prior to start of concrete activities.	M-208			X	
VEHICLE TRACKING PAD	Source control, placed to prevent tracking of sediment from disturbed area to offsite surface. Place prior to start of construction disturbances.	M-208		X	X	
Engineered SEDIMENT BASIN	Constructed early in project, prior to storm sewer/ditches and in accordance with 208.05(p) to capture storm flow. Outlet structure and/or outfall shall be modified for temporary sediment control using an approved non-standard detail. Outlets that withdraw water from or near the surface shall be installed when discharging from basins and impoundments, unless infeasible					
DEWATERING (Contractor is responsible for obtaining a permit from Colorado Department of Health and Environment.)	Shall be done in such a manner to prevent potential pollutants from entering state waters.					
TEMPORARY STREAM CROSSING	Constructed over stream or drainage to prevent discharge of pollutants from construction equipment into water.					
CLEAN WATER DIVERSION	Placed to divert clean surface or ground water around disturbance area to prevent it from mixing with construction runoff.					
OTHER						

NON-STRUCTURAL Control Measures that may be potentially used on the project for erosion and sediment control; practices may include, but are not limited to: Erosion control devices are used to limit the amount of soil loss on site. Sediment control devices are designed to capture sediment on the project site.

APPLICATION, CONTROL MEASURE	NARRATIVE	M-STANDARD or "For NON-STANDARD	IN USE ON SITE	CONTROL MEASURE IMPLEMENTATION PHASE		
				INITIAL ACTIVITY	INTERIM ACTIVITIES	PERMANENT STABILIZATION
VEGETATIVE BUFFER STRIP Fence (plastic)	Finishing component for filtering sediment-laden runoff from disturbance area. Area within CDOT ROW or temporary easement to be identified on SWMP prior to construction starting.					
GRADING APPLICATIONS (LANDFORM)	Existing or created landforms may be used as a control measure if they prevent sediment from entering or leaving the disturbance area. If a landform directs flow of water to a concentrated outfall point, the outfall point shall be protected to prevent erosion. Area to be identified on SWMP prior to construction starting.	M-208			X	
TOPSOIL MANAGEMENT STOCKPILE/SALVAGE Windrow or stockpile	Prior to any site disturbance work commencing, existing topsoil shall be scraped to a depth four inches or as specified, and placed in stockpiles or windrows. Upon completion of final grading, topsoil shall be evenly distributed over embankment to a depth of four inches or as specified.	M-208			X	
SURFACE ROUGHENING / GRADING TECHNIQUES	Temporary stabilization of disturbance and to minimize wind and erosion.					
SEEDING (TEMPORARY)	Temporary stabilization used for over wintering of disturbance or used to control erosion for areas scheduled for future construction.				X	
BONDED FIBER MATRIX or MULCHING (HYDRAULIC)	Not to be used in areas of concentrated flows, i.e. ditch lines. To be for either Interim or Permanent Stabilization placed as a surface cover for erosion control. May be used as surface cover when work is temporarily halted and as approved by the Engineer for stockpiles.					
Straw or Hay MULCH/MULCH TACKIFIER	Interim or Permanent Stabilization placed as a surface cover for erosion control and or seeding establishment. To be installed as Interim Stabilization as a surface cover when work is temporarily halted and as approved by the Engineer					X
SPRAY-ON MULCH BLANKET (Not to be used in areas of concentrated flows, i.e. ditch lines.)	Interim or Permanent Stabilization placed as a surface cover for erosion control and or seeding establishment. To be installed as temporary surface cover when work is temporarily halted and as approved by the Engineer					
SEEDING PERMANENT (NATIVE)	Permanent Stabilization of disturbance and to reduce runoff and control erosion on disturbed areas.					X
SOIL RETENTION BLANKET (SRB)	Permanent Stabilization of disturbance and to reduce runoff and control erosion on disturbed areas.	M-216				

Template Revised: 2/x/2021

BID SET 1/4/22

Computer File Information			
Creation Date:	1/4/2022	Initials:	DET
Last Modification Date:	1/4/2022	Initials:	DET
Full Path:	P:_ENGINEERING_Projects\TANAGER WAY - 2015 Disaster_362483\CONTRACT\Fence - IFB\CADD\Drawings		
Drawing File Name:	SWMP-a - SW5		
Acad. Ver. Civ3D 2020 Scale:	1" = 1'	Units:	Feet

Index of Revisions		
R-		
R-		
R-		
R-		
R-		

El Paso County
Department of Public Works
3275 Akers Drive
Colorado Springs, Colorado 80922-1547
Ph: 719-520-6460 Fax: 719-520-6878
Division of Transportation

As Constructed	Tanager SWMP Stormwater Mgmt Plan			Project No./Code
No Revisions:				362483
Revised:	Designer: ENG	Structure Numbers		
Void:	Detailer: DET			Sheet Number 13
	SheetSubset:	Subset Sheets:	of	

P:_ENGINEERING_Projects\TANAGER WAY - 2015 Disaster_362483\CONTRACT\Fence - IFB\CADD\Drawings\SWMP-a.dwg, SW5, 7/18/2022 7:20:49 AM, dotnorton, Supersedes All Previously Dated Sets

TURF REINFORCEMENT MAT (TRM)	Permanent Stabilization of disturbance and to reduce runoff and control erosion on disturbed areas. Placed in channels or on slopes for erosion control, channel liner and seeding establishment.	M-216				
Sweeping	Source control, used to remove sediment tracked onto paved surfaces and to prevent sediment from entering drainage system. Sweep daily and at the end of the construction shift as needed. Kick brooms shall not be permitted.				X	
OTHER						

CALL UTILITY NOTIFICATION CENTER OF COLORADO
811
CALL 3 BUSINESS DAYS IN ADVANCE BEFORE YOU DIG, GRADE OR EXCAVATE FOR THE MARKING OF UNDERGROUND MEMBER UTILITIES.
811 Know what's below. Call before you dig.

BID SET 1/4/22

P:_ENGINEERING_Projects\TANAGER WAY - 2015 Disaster_362483\CONTRACT\Fence - IFB\CADD\Drawings\SWMP-a.dwg, SW6, 7/18/2022 7:20:52 AM, dotnorton, Supersedes All Previously Dated Sets

Template Revised: 2/x/2021

Computer File Information				Index of Revisions		
Creation Date:	1/4/2022	Initials: DET	R–			
Last Modification Date:	1/4/2022	Initials: DET	R–			
Full Path:	P:_ENGINEERING_Projects\TANAGER WAY - 2015 Disaster_362483\CONTRACT\Fence - IFB\CADD\Drawings		R–			
Drawing File Name:	SWMP–a – SW6		R–			
Acad. Ver. Civ3D 2020 Scale: 1" = 1'	Units: Feet		R–			

El Paso County
Department of Public Works
3275 Akers Drive
Colorado Springs, Colorado 80922–1547
Ph: 719–520–6460 Fax: 719–520–6878
Division of Transportation

As Constructed	Tanager SWMP Stormwater Mgmt Plan			Project No./Code
No Revisions:				362483
Revised:	Designer: ENG	Structure Numbers		
	Detailer: DET			
Void:	SheetSubset:	Subset Sheets: of		Sheet Number 14

P:_ENGINEERING_Projects\TANAGER WAY - 2015 Disaster_362483\CONTRACT\Fence - IFB\CADD\Drawings\SWMP-a.dwg, SW7, 7/18/2022 7:20:53 AM, dotnorton, Supersedes All Previously Dated Sets

CALL UTILITY NOTIFICATION CENTER OF COLORADO 811
CALL 3 BUSINESS DAYS IN ADVANCE BEFORE YOU DIG, GRADE OR EXCAVATE FOR THE MARKING OF UNDERGROUND MEMBER UTILITIES.
811 Know what's below. Call before you dig.

BID SET 1/4/22

9. TABULATION OF STORMWATER QUANTITIES

A. Control Measure sediment removal and disposal shall not be measured or paid for separately but shall be included in the cost of the project.

B. It is estimated that labor, blading, dozing, combination loader and/or backhoe may be required for miscellaneous erosion control work as described by the Engineer. Work shall not be paid for separately but shall be included in the cost of the project.

C. Establishment of seeded areas from Substantial Landscape Completion shall not be paid for separately but shall be included in the cost of the project. This shall include mowing, weed control, reseeding/mulch/tackifier.

https://www.codot.gov/business/designsupport/cdot-construction-specifications/2019-construction-specifications/project-special-provision-work-sheets?b_start:int=20]

10. BIOLOGICAL IMPACTS

A. ENVIRONMENTAL IMPACTS:

1. Wetland Impacts: NO
2. Stream Impacts: NO
3. Threatened and Endangered Species:

"No species are anticipated to be impacted by the project."

11. NOTES

Template Revised: 2/x/2021

Computer File Information			
Creation Date:	1/4/2022	Initials:	DET
Last Modification Date:	1/4/2022	Initials:	DET
Full Path:	P:_ENGINEERING_Projects\TANAGER WAY - 2015 Disaster_362483\CONTRACT\Fence - IFB\CADD\Drawings		
Drawing File Name:	SWMP-a - SW7		
Acad. Ver. Civ3D 2020 Scale:	1" = 1'	Units:	Feet

Index of Revisions		
R-		
R-		
R-		
R-		
R-		

El Paso County
Department of Public Works
3275 Akers Drive
Colorado Springs, Colorado 80922-1547
Ph: 719-520-6460 Fax: 719-520-6878
Division of Transportation

As Constructed	Tanager SWMP Stormwater Mgmt Plan			Project No./Code
No Revisions:				362483
Revised:	Designer: ENG	Structure Numbers		
Void:	Detailer: DET			
	SheetSubset:	Subset Sheets:	of	Sheet Number 15

CALL UTILITY NOTIFICATION CENTER OF COLORADO 811
CALL 3 BUSINESS DAYS IN ADVANCE BEFORE YOU DIG, GRADE OR EXCAVATE FOR THE MARKING OF UNDERGROUND MEMBER UTILITIES.
Know what's below. Call before you dig.

P:_ENGINEERING_Projects\TANAGER WAY - 2015 Disaster_362483\CONTRACT\Fence - IFB\CADD\Drawings\SWMP-a.dwg, M-208-1_1, 7/18/2022 7:20:55 AM, dotmorton, Supersedes All Previously Dated Sets

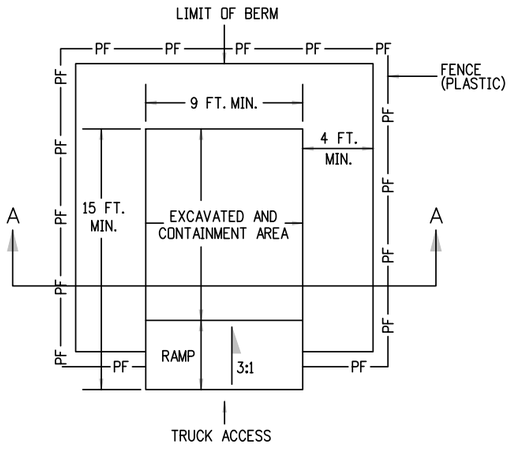

PLAN VIEW

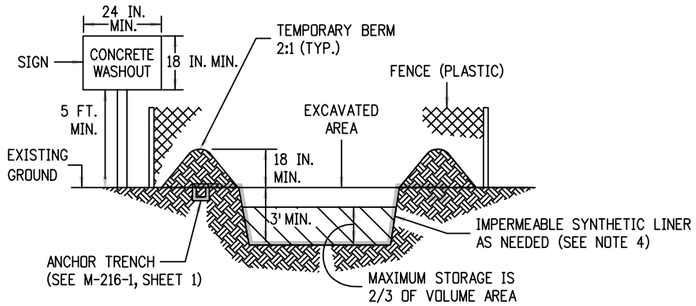

SECTION A-A

NOTES:

1. A FENCE (PLASTIC) CONFORMING TO SECTION 607 SHALL BE INSTALLED AROUND THE CONCRETE WASHOUT AREA, EXCEPT AT THE OPENING.
2. THE CONCRETE WASHOUT SIGN SHALL HAVE LETTERS AT LEAST 3 INCHES HIGH AND CONFORM TO SUBSECTION 630.02.
3. ALL MATERIALS AND LABOR TO COMPLETE THE CONCRETE WASHOUT STRUCTURE SHALL BE INCLUDED IN THE COST OF WORK AND NOT PAID FOR SEPARATELY.
4. THE BOTTOM OF EXCAVATION SHALL BE A MINIMUM OF FIVE FEET ABOVE GROUND WATER. IF NOT, THE BOTTOM OF EXCAVATION SHALL BE IN ACCORDANCE WITH 208.02 (j).
5. THE PAY ITEM NUMBER FOR CONCRETE WASHOUT STRUCTURE (EACH) IS 208-00045.

CONCRETE WASHOUT STRUCTURE

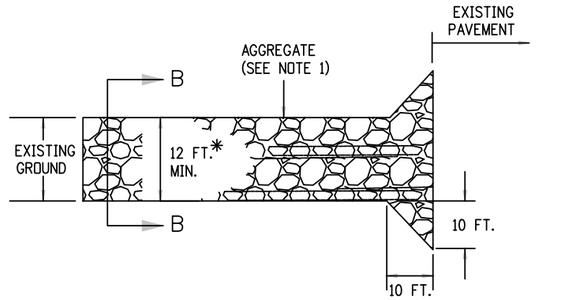

PLAN VIEW

* SHALL EXTEND FULL WIDTH OF INGRESS AND EGRESS OPERATION.

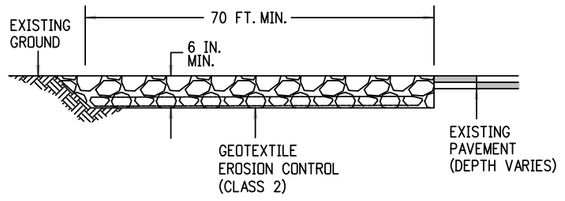

ELEVATION SECTION

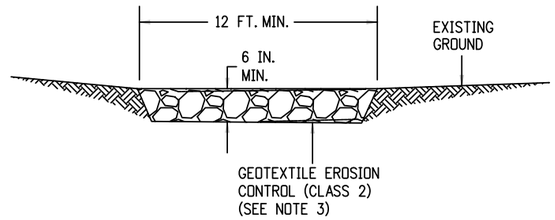

SECTION B-B

NOTES:

1. AGGREGATE SHALL CONFORM TO SUBSECTION 208.02 (l).
2. THE CONTRACTOR SHALL PROTECT CURB AND GUTTER THAT CROSSES THE ENTRANCE FROM DAMAGE, WHILE NOT BLOCKING FLOW OF WATER THRU STRUCTURE. PROTECTION OF THE CURB AND GUTTER SHALL BE INCLUDED IN THE COST OF WORK AND NOT PAID FOR SEPARATELY.
3. GEOTEXTILE SHALL CONFORM TO SUBSECTION 712.08.
4. ALL MATERIALS AND LABOR TO COMPLETE THE VEHICLE TRACKING PAD SHALL BE INCLUDED IN THE COST OF WORK AND NOT PAID FOR SEPARATELY.
5. THE PAY ITEM NUMBER FOR VEHICLE TRACKING PAD (EACH) IS 208-00070.

VEHICLE TRACKING PAD

BID SET 1/4/22

Computer File Information			
Creation Date:	1/4/2022	Initials:	DET
Last Modification Date:	1/4/2022	Initials:	DET
Full Path:	P:_ENGINEERING_Projects\TANAGER WAY - 2015 Disaster_362483\CONTRACT\Fence - IFB\CADD\Drawings		
Drawing File Name:	SWMP-a - M-208-1_1		
Acad. Ver. Civ3D 2020 Scale:	1" = 1'	Units:	Feet

Index of Revisions		
R–		
R–		
R–		
R–		
R–		

El Paso County
Department of Public Works
3275 Akers Drive
Colorado Springs, Colorado 80922-1547
Ph: 719-520-6460 Fax: 719-520-6878
Division of Transportation

As Constructed				
No Revisions:	Tanager SWMP M-208-1 Sht 1 of 11			Project No./Code 362483
Revised:	Designer: ENG	Structure Numbers		
Void:	Detailer: DET			Sheet Number 16
	SheetSubset:	Subset Sheets:	of	

CALL UTILITY NOTIFICATION CENTER OF COLORADO 811
CALL 3 BUSINESS DAYS IN ADVANCE BEFORE YOU DIG, GRADE OR EXCAVATE FOR THE MARKING OF UNDERGROUND MEMBER UTILITIES.
Know what's below. Call before you dig.

P:_ENGINEERING_Projects\TANAGER WAY - 2015 Disaster_362483\CONTRACT\Fence - IFB\CADD\Drawings\SWMP-a.dwg, M-208-1_2, 7/18/2022 7:21:03 AM, dotnorton, Supersedes All Previously Dated Sets

BID SET 1/4/22

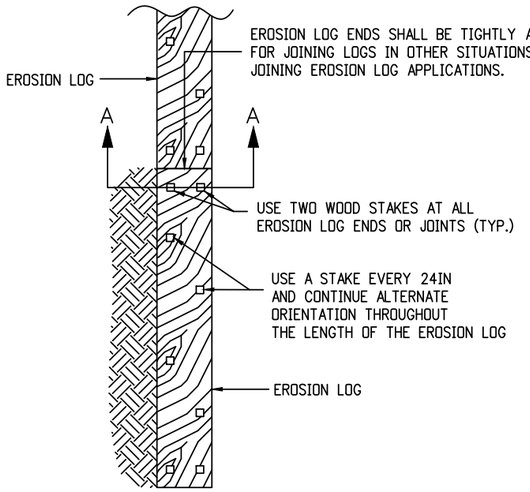

PLAN VIEW

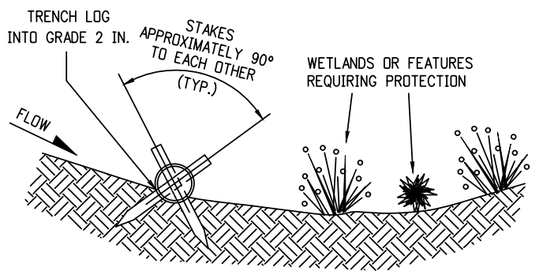

SECTION A-A

TYPICAL STAKE INSTALLATION

EROSION LOGS PAY ITEMS	
NUMBER	DESCRIPTION
208-00012	TYPE 1 (9 IN.)
208-00002	TYPE 1 (12 IN.)
208-00013	TYPE 1 (20 IN.)
208-00007	TYPE 2 (8 IN.)
208-00008	TYPE 2 (12 IN.)
208-00009	TYPE 2 (18 IN.)
208-00022	TYPE 3 (9 IN.)
208-00023	TYPE 3 (12 IN.)
208-00024	TYPE 3 (20 IN.)

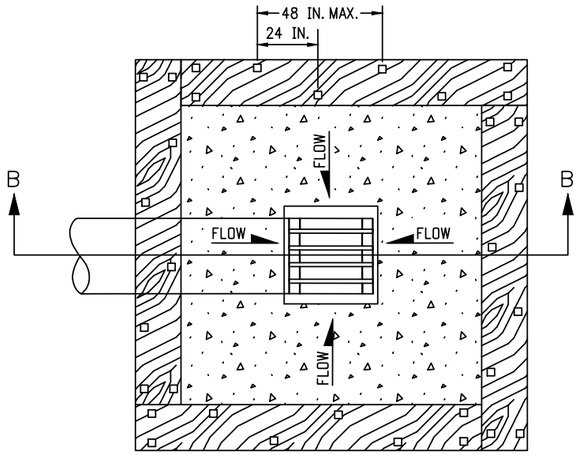

PLAN VIEW

NOTE: THE TOPS OF ALL STAKES SHALL NOT EXTEND MORE THAN 2 INCHES ABOVE THE TOPS OF EROSION LOGS.

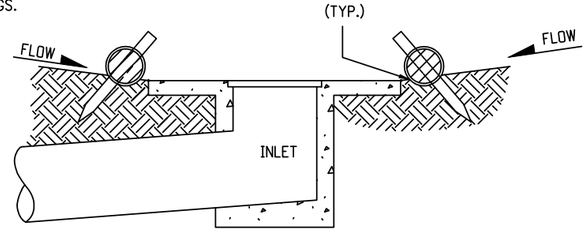

SECTION B-B

NOTE: LOCATE EROSION LOGS AT THE OUTSIDE EDGE OF THE CONCRETE APRON.

EROSION LOG FILTER AT DROP INLET

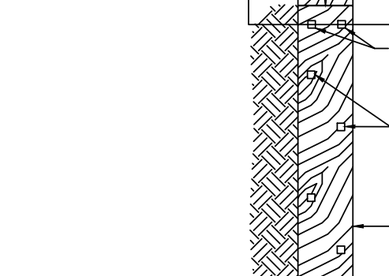

OVERLAP JOINING DETAIL

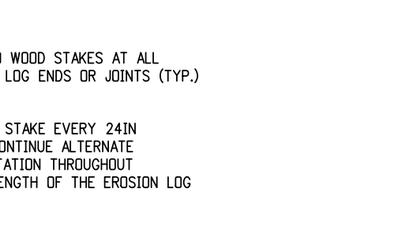

J-HOOK JOINING DETAIL

JOINING EROSION LOG APPLICATIONS

EROSION LOG APPLICATIONS

NOTE

1. STAKES SHALL BE INCLUDED IN THE COST OF THE EROSION LOGS.

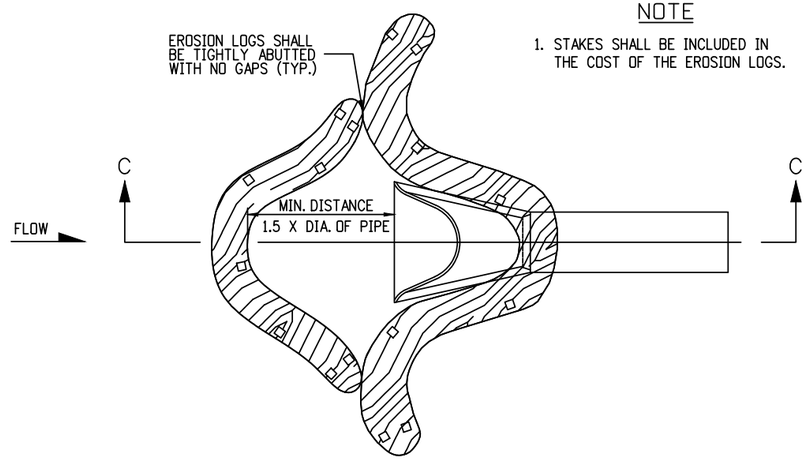

PLAN VIEW

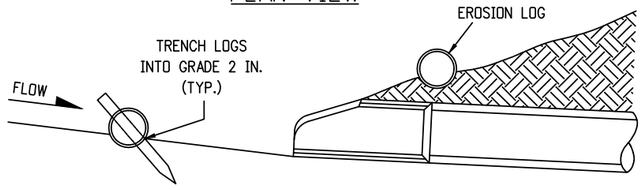

SECTION C-C
(NOT ALL LOGS SHOWN)

NOTE: TOP OF STAKE SHALL NOT EXTEND PAST TOP OF EROSION LOG MORE THAN 2 IN.

EROSION LOG CULVERT INLET PROTECTION

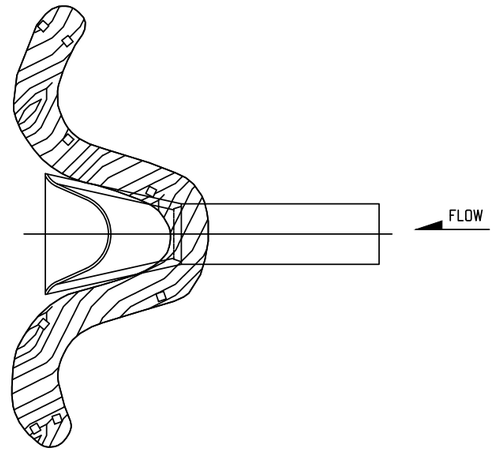

EROSION LOG CULVERT OUTLET PROTECTION

Computer File Information			
Creation Date:	1/4/2022	Initials:	DET
Last Modification Date:	1/4/2022	Initials:	DET
Full Path:	P:_ENGINEERING_Projects\TANAGER WAY - 2015 Disaster_362483\CONTRACT\Fence - IFB\CADD\Drawings		
Drawing File Name:	SWMP-a - M-208-1_2		
Acad. Ver. Civ3D 2020 Scale:	1" = 1'	Units:	Feet

Index of Revisions		
R-		
R-		
R-		
R-		
R-		

El Paso County
Department of Public Works
3275 Akers Drive
Colorado Springs, Colorado 80922-1547
Ph: 719-520-6460 Fax: 719-520-6878
Division of Transportation

As Constructed			
No Revisions:			
Revised:			
Void:			

Tanager SWMP M-208-1 Sht 2 of 11			
Designer:	ENG	Structure Numbers	
Detailer:	DET		
SheetSubset:		Subset Sheets:	of

Project No./Code	
362483	
Sheet Number	17

CALL UTILITY NOTIFICATION CENTER OF COLORADO 811
CALL 3 BUSINESS DAYS IN ADVANCE BEFORE YOU DIG, GRADE, OR EXCAVATE FOR THE MARKING OF UNDERGROUND MEMBER UTILITIES.
Know what's below. Call before you dig.

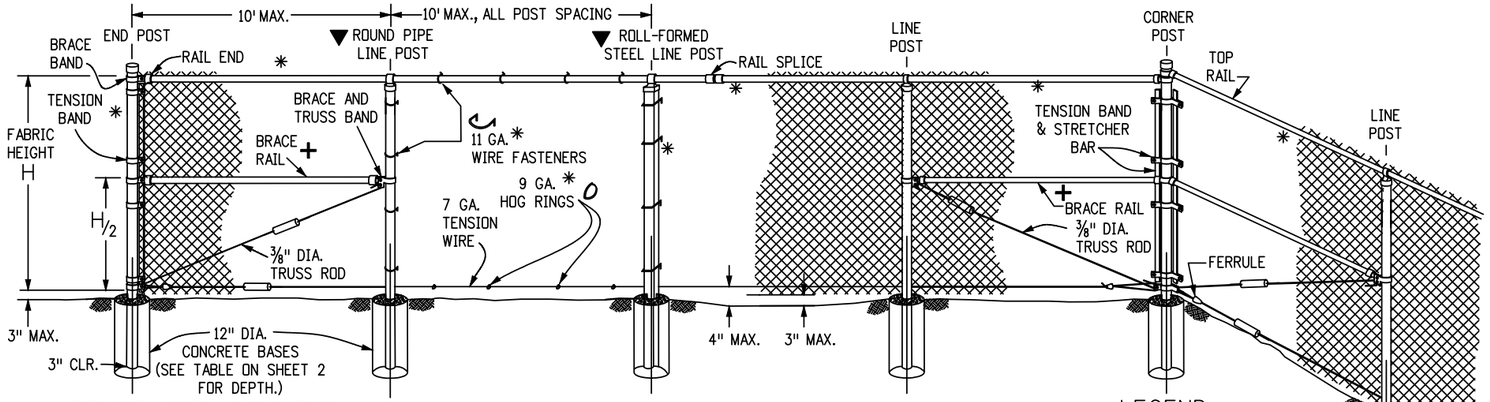

FENCE WITH TOP RAIL (USE ONLY AT SPECIAL LOCATIONS BEYOND CLEAR ZONE WHEN THE TOP RAIL IS SPECIFIED ON PLANS)

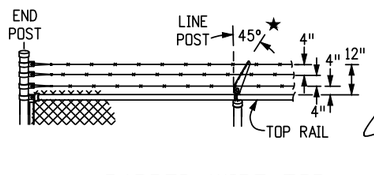

BARBED WIRE TOP (USE ONLY WHEN SPECIFIED ON PLANS)

LEGEND

* ATTACH FABRIC TO ALL FENCE & GATE STRUCTURES AT 12 IN. INTERVALS VERTICALLY AND AT 20 IN. HORIZONTALLY.

★ CASE 1. TO KEEP INSIDERS IN, SLOPE TOP IN 45°

★ CASE 2. TO KEEP OUTSIDERS OUT, SLOPE TOP OUT 45° BARBED WIRE OVER GATES SHALL NOT BE SLOPED

TIGHTENER OR TURNBUCKLE SYMBOL, (SEE DETAILS ON SHEETS 2 AND 3).

▼ TYPE OF LINE POST (ROUND PIPE OR ROLL-FORMED STEEL) SHALL BE AT THE OPTION OF THE CONTRACTOR UNLESS OTHERWISE SHOWN ON THE PLANS.

\+ BRACE RAIL IS NOT REQUIRED FOR 36 IN., 42 IN., OR 48 IN. FABRIC HEIGHTS. BRACE RAIL FOR FENCE WITH ROLL-FORMED STEEL ELEMENTS IS 12 IN. BELOW THE TOP RAIL, (SEE SHEET 3).

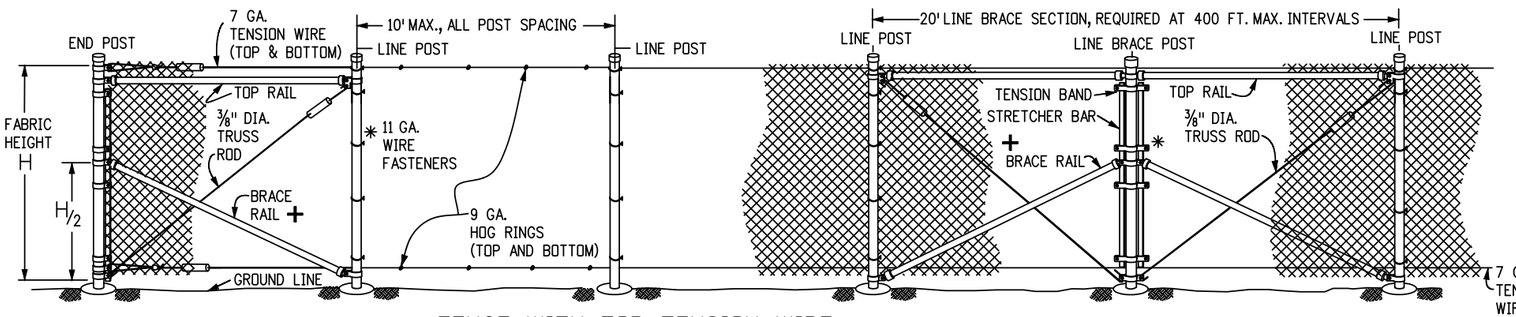

FENCE WITH TOP TENSION WIRE (USE FOR STANDARD CHAIN LINK FENCE)

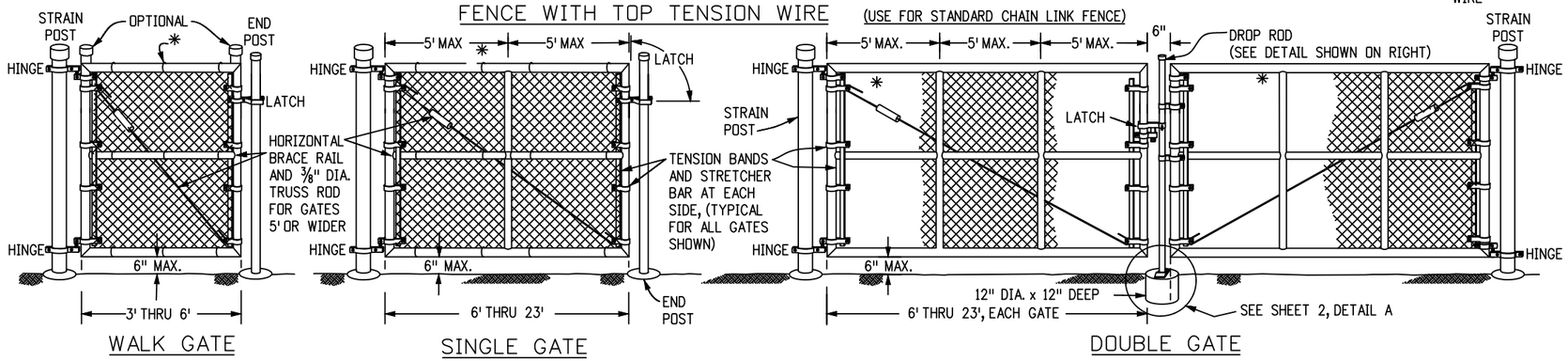

WALK GATE SINGLE GATE DOUBLE GATE

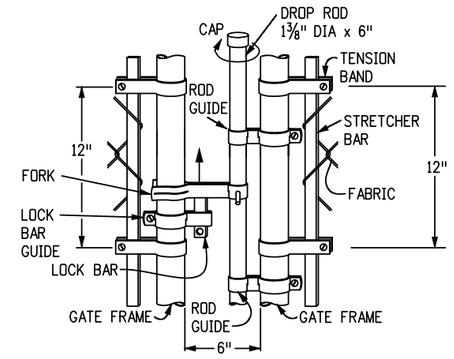

TYPICAL DROP ROD ASSEMBLY

GENERAL NOTES

1. AT EACH LOCATION WHERE AN ELECTRIC TRANSMISSION, DISTRIBUTION, OR SECONDARY LINE CROSSES A FENCE, THE CONTRACTOR SHALL FURNISH AND INSTALL A GROUND CONFORMING TO ARTICLE 250 OF THE NATIONAL ELECTRIC CODE. A GROUND SHALL ALSO BE INSTALLED A MAXIMUM OF EVERY 500 FT. ALONG THE FENCE. THE GROUND ROD SHALL BE A MINIMUM DIAMETER OF ½ IN. AND 8 FT. IN LENGTH, AND DRIVEN AT LEAST 7½ FT. INTO THE GROUND. THE ROD SHALL BE CONNECTED TO EACH WIRE WITH A MINIMUM AWG NO. 8 STRANDED COPPER WIRE. GROUNDING WILL NOT BE PAID FOR SEPARATELY BUT SHALL BE INCLUDED IN THE COST OF THE FENCE.
2. H (HEIGHT OF FABRIC) SHALL BE AS SHOWN ON THE PLANS. FABRIC IS AVALIABLE IN THE FOLLOWING HEIGHTS: 36 IN., 42 IN., 48 IN., 60 IN., 72 IN., 84 IN., 96 IN., 108 IN., 120 IN., AND 144 IN.
3. CHAIN LINK FENCE SHALL CONFORM TO AASHTO M 181.
4. CHAIN LINK FABRIC SHALL BE 2 IN. MESH NO. 9 GAGE GALVANIZED OR ALUMINUM COATED WIRE SECURELY FASTENED TO TENSION WIRE, LINE POSTS, RAILS, BRACES AND STRETCHER BARS SPACED AS SHOWN HEREON. WIRE FASTENERS AND TIE CLIPS SHALL BE NO. 11 GAGE (W&M) GALVANIZED STEEL WIRE OR NO. 7 GAGE (B&S) ALUMINUM WIRE, AND HOG RINGS SHALL BE NO. 9 GAGE, ALL IN CONFORMANCE WITH ASTM F 626.
5. STEEL POSTS, RAILS AND GATE FRAMES SHALL CONFORM TO AASHTO M 181 TYPE 1, GRADE 1 OR GRADE 2.
6. AT THE CONTRACTOR'S OPTION, PIPE USED FOR FENCE CONSTRUCTION SHALL CONFORM TO THE DIMENSIONS AND WEIGHTS FOR EITHER "ORDINARY PIPE" OR "ALTERNATIVE PIPE" AS SHOWN ON SHEET 2. "ALTERNATIVE PIPE" SHALL BE HIGH STRENGTH STEEL PIPE CONFORMING TO FEDERAL SPECIFICATION RR-F-191/3C.
7. TENSION WIRE SHALL BE CONTINUOUS BETWEEN END OR CORNER POST AND LINE BRACE POST. A TURNBUCKLE OR OTHER APPROVED TIGHTENING DEVICE SHALL BE USED FOR EACH CONTINUOUS SPAN OF TENSION WIRE.
8. TENSION WIRE SHALL CONFORM TO AASHTO M 181.
9. CONCRETE FOOTINGS SHALL HAVE TOPS CROWNED AT GROUND LEVEL AND SHALL BE CLASS B. CONCRETE WITH LIGHTWEIGHT AGGREGATE CONFORMING TO AASHTO M 195, MAY BE SUBSTITUTED.
10. TERMINATION OF FENCE AT BRIDGES OR OTHER STRUCTURES SHALL BE AS SHOWN ON THE PLANS.
11. CHAIN LINK FABRIC UP TO 5 FT. HIGH SHALL BE KNUCKLED AT THE TOP AND BOTTOM SELVAGES. FABRIC OVER 5 FT. HIGH SHALL BE TWISTED AND BARBED ON THE TOP SELVAGE AND KNUCKLED ON THE BOTTOM SELVAGE.
12. FENCE MAY BE CONSTRUCTED WITH EITHER ROUND PIPE OR ROLL-FORMED STEEL COMPONENTS. THE CONTRACTOR SHALL STATE AT THE PRECONSTRUCTION CONFERENCE, THE TYPE OF CONSTRUCTION AND TYPE OF LINE POST TO BE USED THROUGHOUT THE PROJECT.
13. THE CONTRACTOR SHALL BE RESPONSIBLE FOR RE-ESTABLISHING DISTURBED OR DESTROYED SURVEY MONUMENTS TO THE APPROPRIATE ACCURACY IN ACCORDANCE WITH SUBSECTION 625.08 OF THE STANDARD SPECIFICATIONS.

BID SET 7/18/22

Computer File Information			
Creation Date:	1/4/2022	Initials:	DAN
Last Modification Date:	7/18/2022	Initials:	OAL
Full Path:	P:_ENGINEERING_Projects\TANAGER WAY - 2015 Disaster_362483\CONTRACT\Fence - IFB\CADD\Drawings		
Drawing File Name:	M607_1-3 - ChFe1		
Acad. Ver. Civ3D 2018 Scale:	1" = 1'	Units:	Feet

Index of Revisions		
R-		
R-		
R-		
R-		
R-		

El Paso County
Department of Public Works
3275 Akers Drive
Colorado Springs, Colorado 80922-1547
Ph: 719-520-6460 Fax: 719-520-6878
Division of Transportation

As Constructed			
No Revisions:			
Revised:			
Void:			

Tanager Fence Plan Chain Link Fence M 607-2			
Designer:	OAL	Structure Numbers	
Detailer:	DAN		
SheetSubset:		Subset Sheets:	of

Project No./Code	
362483	
Sheet Number	18

P:_ENGINEERING_Projects\TANAGER WAY - 2015 Disaster_362483\CONTRACT\Fence - IFB\CADD\Drawings\M607_1-3.dwg, ChFe1, 7/18/2022 7:21:12 AM, dotnorton, Supersedes All Previously Dated Sets

CALL UTILITY NOTIFICATION CENTER OF COLORADO 811
CALL 3 BUSINESS DAYS IN ADVANCE BEFORE YOU DIG, GRADE, OR EXCAVATE FOR THE MARKING OF UNDERGROUND MEMBER UTILITIES.
Know what's below. Call before you dig.

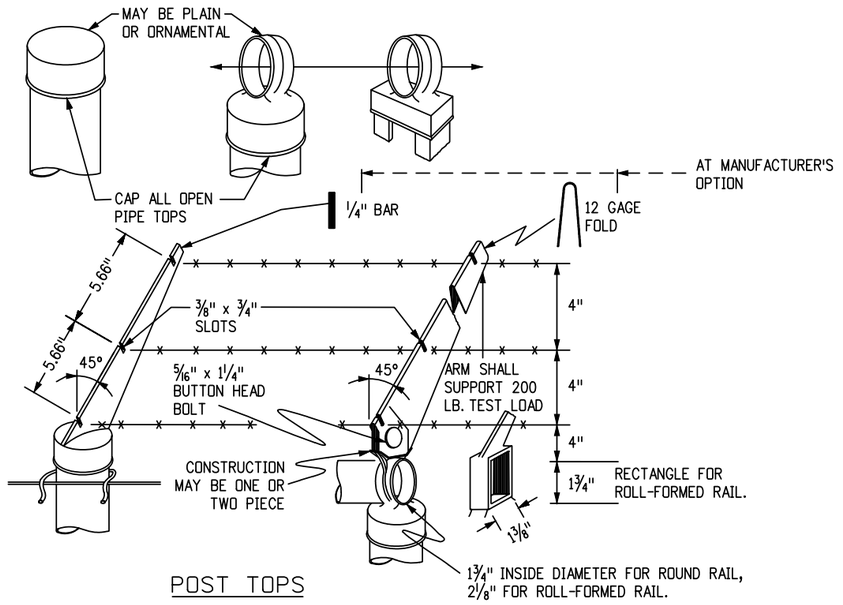

POST TOPS

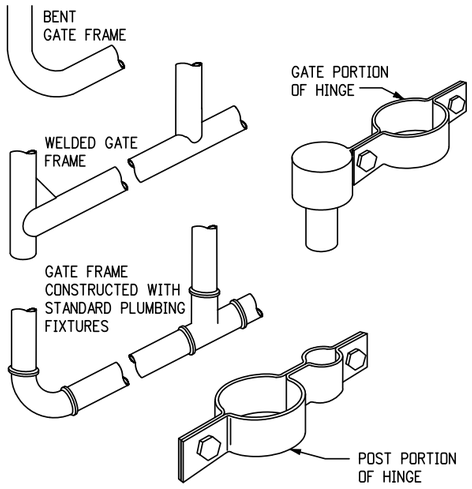

GATE FRAMES & HINGE

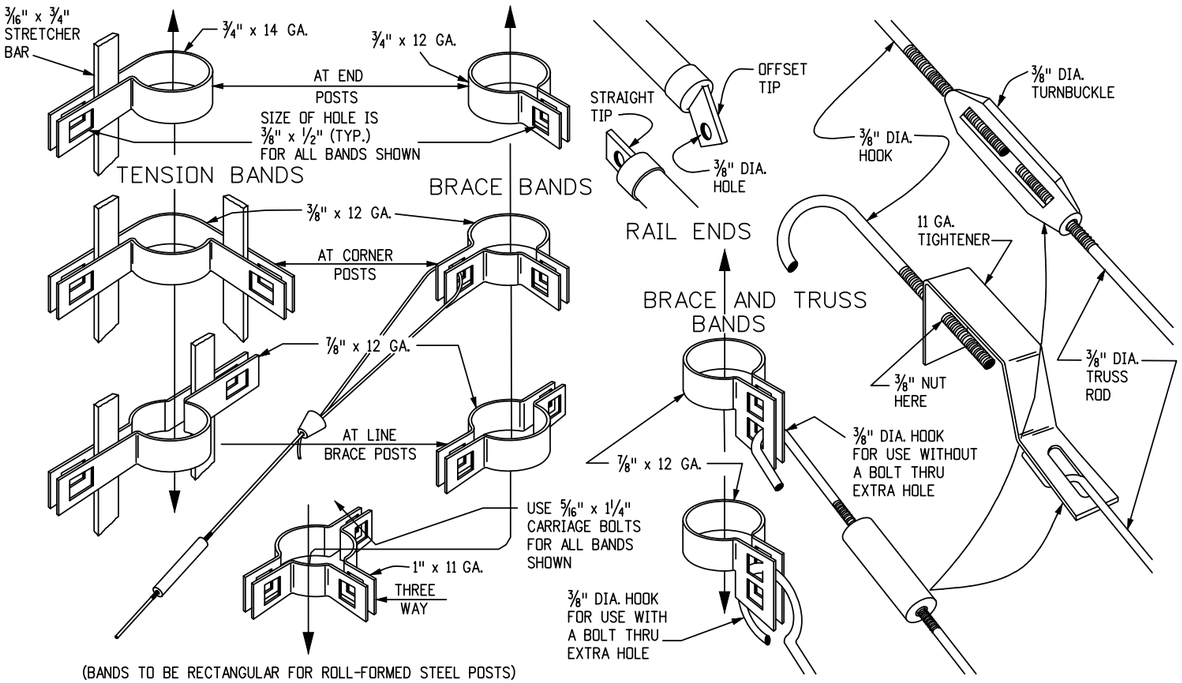

BANDS, RAIL ENDS & TIGHTENERS (DIMENSIONS SHOWN ARE MINIMUMS)

FENCE MATERIAL

FABRIC HEIGHT	END, CORNER AND LINE BRACE POSTS		LINE POSTS		TOP & BRACE RAILS	
H	ROUND PIPE I.D.	ROLL-FORMED STEEL	ROUND PIPE I.D.	ROLL-FORMED STEEL	ROUND PIPE I.D.	ROLL-FORMED STEEL
FEET	INCHES		INCHES		INCHES	
3 THRU 6	2.5	3.5 x 3.5	1.5	1.875 x 1.625	1.25	1.25 x 1.625
> 6 THRU 8	2.5	3.5 x 3.5	2.0	1.875 x 1.625	1.25	1.25 x 1.625
> 8 THRU 12	2.5	3.5 x 3.5	2.0	2.250 x 1.625	1.25	1.25 x 1.625

FABRIC HEIGHT	△ CONCRETE BASE			
	DEPTH	DIA.	DEPTH	DIA.
H				
FEET	INCHES		INCHES	
3 THRU 4	34	12	28	12
> 4 THRU 12	40	12	40	12

△ ALL POSTS 3 IN CLEAR FROM BOTTOM OF CONCRETE BASE

ORDINARY PIPE

NOMINAL I.D.	O.D.	WALL THICK.	WEIGHT
INCHES			LB/FT
1.25	1.660	0.140	2.27
1.50	1.900	0.145	2.72
2.00	2.375	0.154	3.65
2.50	2.875	0.203	5.79
3.00	3.500	0.216	7.58
3.50	4.000	0.226	9.11
4.00	4.500	0.237	10.79
5.00	5.563	0.258	14.62
6.00	6.625	0.280	18.97
8.00	8.625	0.322	28.55

ALTERNATIVE PIPE

NOMINAL I.D.	O.D.	WALL THICK.	WEIGHT
INCHES			LB/FT
1.25	1.660	0.111	1.836
1.50	1.900	0.120	2.281
2.00	2.375	0.130	3.117
2.50	2.875	0.160	4.640

GATE MATERIAL

GATE FRAME WIDTH	STRAIN POST		△ CONCRETE BASE	
	ROUND I.D.	ROLL-FORMED	DEPTH	DIA.
FEET	INCHES		INCHES	
3 THRU 6	2.5	3.5 x 3.5	36	12
> 6 THRU 13	3.5		42	12
> 13 THRU 18	6.0		48	18
> 18 THRU 23	8.0		48	24

GATE FRAME		FRAME PIPE	BRACING PIPE
WIDTH	HEIGHT	I.D.	I.D.
FEET		INCHES	
3 THRU 8	3 THRU 6	1.25	1.25
> 8 THRU 23	6	1.50	1.25
> 8 THRU 23	> 6 THRU 12	1.50	1.50

ROLL-FORMED STEEL

PART	SIZE	THICK.	WEIGHT
	INCHES	GAGE	LB/FT
TOP & BRACE RAILS	1.250 x 1.625	14	2.08
LINE POST (H: 3FT - 6FT)	1.875 x 1.625	12	2.75
LINE POST (H: > 6FT - 8FT)	1.875 x 1.625	11	3.36
LINE POST (H: > 8FT - 12FT)	2.250 x 1.625	11	4.02
END, CORNER & LINE BRACE POSTS	3.50 x 3.50	10	7.59

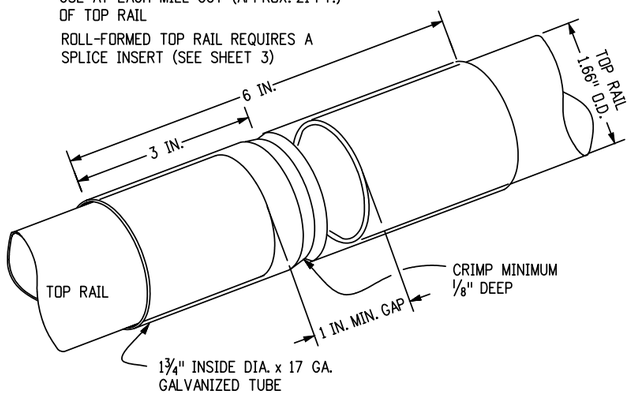

RAIL SPLICE

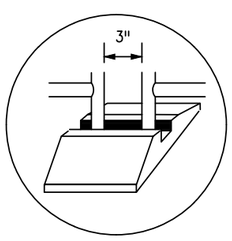

DROP ROD IS OPTIONAL IF GATE FRAMES EXTEND DOWN TO CENTER REST. USE LATCH SHOWN FOR WALK OR SINGLE GATE.

DETAIL A
TYPICAL CENTER REST

BID SET 7/18/22

P:_ENGINEERING_Projects\TANAGER WAY - 2015 Disaster_362483\CONTRACT\Fence - IFB\CADD\Drawings\M607_1-3.dwg, ChFe2, 7/18/2022 7:22:02 AM, dotnorton, Supersedes All Previously Dated Sets

Computer File Information			
Creation Date:	1/4/2022	Initials:	DAN
Last Modification Date:	7/18/2022	Initials:	OAL
Full Path:	P:_ENGINEERING_Projects\TANAGER WAY - 2015 Disaster_362483\CONTRACT\Fence - IFB\CADD\Drawings		
Drawing File Name:	M607_1-3 - ChFe2		
Acad. Ver. Civ3D 2018 Scale:	1" = 1'	Units:	Feet

Index of Revisions		

El Paso County
Department of Public Works
3275 Akers Drive
Colorado Springs, Colorado 80922-1547
Ph: 719-520-6460 Fax: 719-520-6878
Division of Transportation

As Constructed	
No Revisions:	
Revised:	
Void:	

Tanager Fence Plan Chain Link Fence M 607-2			
Designer:	OAL	Structure Numbers	
Detailer:	DAN		
SheetSubset:		Subset Sheets:	of

Project No./Code	
362483	
Sheet Number	19

CALL UTILITY NOTIFICATION CENTER OF COLORADO 811
CALL 3 BUSINESS DAYS IN ADVANCE BEFORE YOU DIG, GRADE, OR EXCAVATE FOR THE MARKING OF UNDERGROUND MEMBER UTILITIES.
Know what's below. Call before you dig.

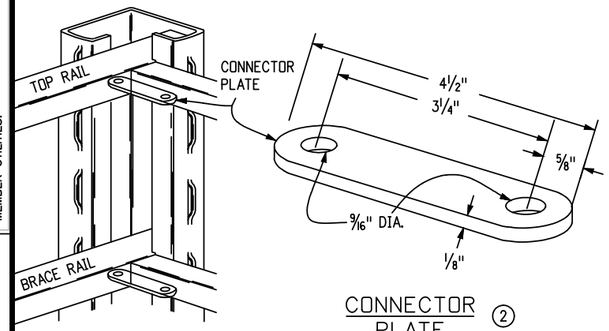

CORNER POST TREATMENT ①

CONNECTOR PLATE ②

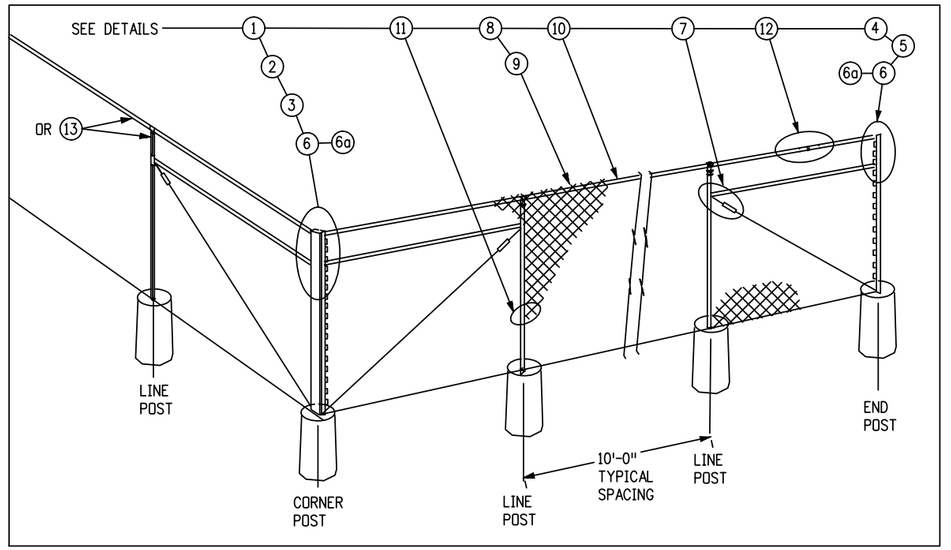

KEY TO DETAILS

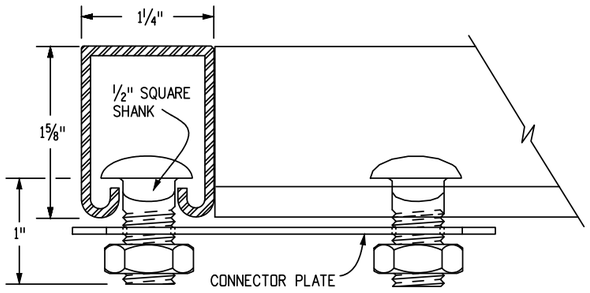

RAIL (SHOWING CORNER ASSEMBLY) ③
14 GAGE ROLL-FORMED STEEL, 20 FT. LENGTHS, 1.40 LB. PER LIN. FT.

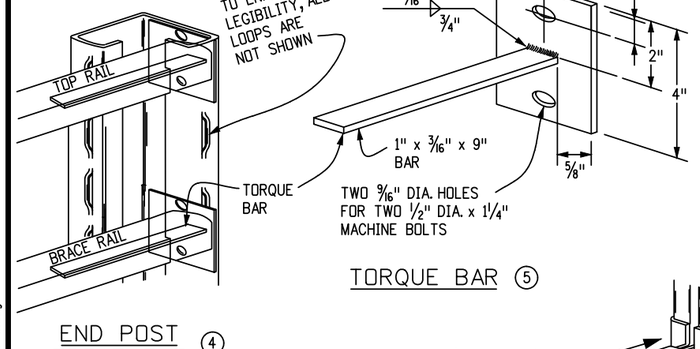

END POST TREATMENT ④

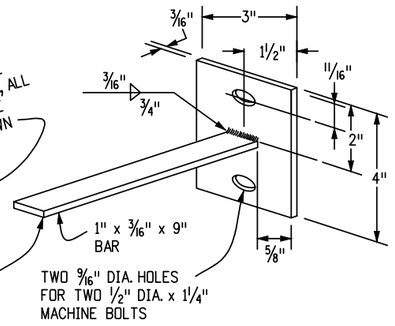

TORQUE BAR ⑤

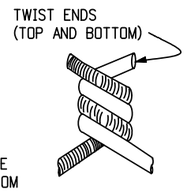

BARBED SELVAGE ⑧

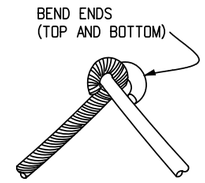

KNUCKLED SELVAGE ⑨
ALTERNATIVE, USE ONLY WHEN CALLED FOR ON THE PLANS

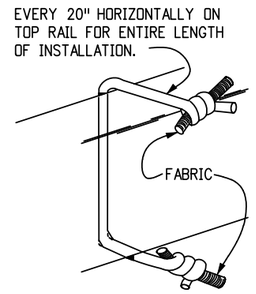

WIRE FASTENER ⑩

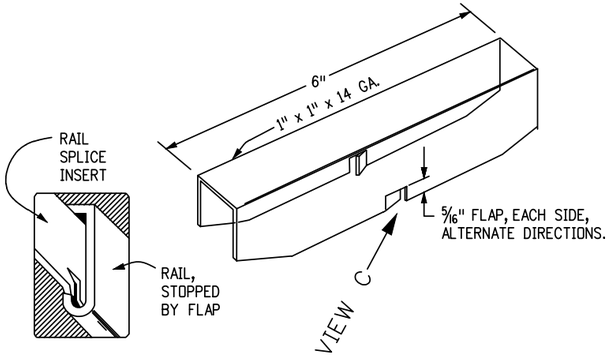

VIEW C

RAIL SPLICE INSERT ⑫

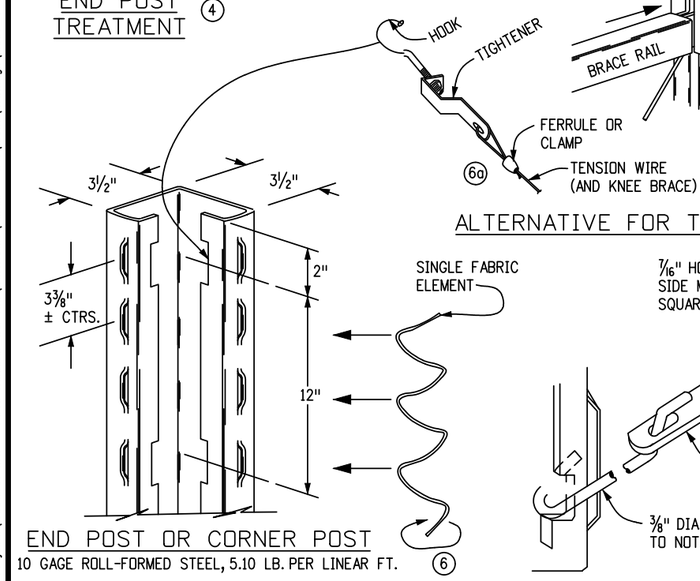

ALTERNATIVE FOR TOP RAIL

END POST OR CORNER POST
10 GAGE ROLL-FORMED STEEL, 5.10 LB. PER LINEAR FT. ⑥

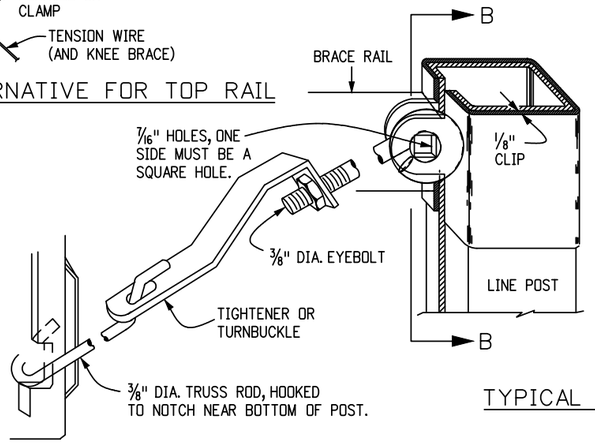

TYPICAL BRACING ⑦

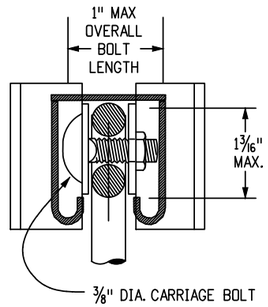

SECTION B-B

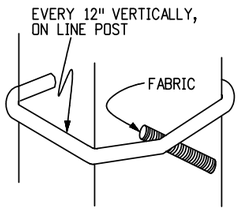

TIE CLIP ⑪

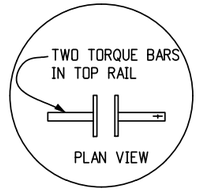

DETAIL A

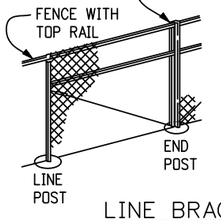

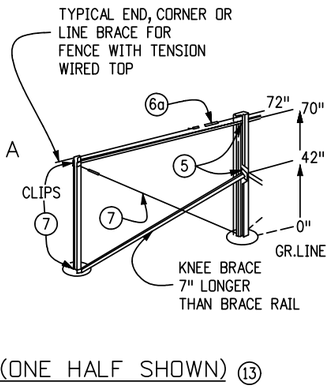

LINE BRACE (ONE HALF SHOWN) ⑬
400 FT. INTERVALS

BID SET 7/18/22

P:_ENGINEERING_Projects\TANAGER WAY - 2015 Disaster_362483\CONTRACT\Fence - IFB\CADD\Drawings\M607_1-3.dwg, ChFe3, 7/18/2022 7:22:10 AM, dotnorton, Supersedes All Previously Dated Sets

Computer File Information			
Creation Date:	3/16/2021	Initials:	DAN
Last Modification Date:	7/18/2022	Initials:	OAL
Full Path:	P:_ENGINEERING_Projects\TANAGER WAY - 2015 Disaster_362483\CONTRACT\Fence - IFB\CADD\Drawings		
Drawing File Name:	M607_1-3 – ChFe3		
Acad. Ver. Civ3D 2018 Scale:	1" = 1'	Units:	Feet

Index of Revisions		
R–		
R–		
R–		
R–		
R–		

El Paso County
Department of Public Works
3275 Akers Drive
Colorado Springs, Colorado 80922–1547
Ph: 719–520–6460 Fax: 719–520–6878
Division of Transportation

As Constructed			
No Revisions:			
Revised:			
Void:			

Tanager Fence Plan Chain Link Fence M 607–2			
Designer:	OAL	Structure Numbers	
Detailer:	DAN		
SheetSubset:		Subset Sheets:	of

Project No./Code	
362483	
Sheet Number	20